INGLESE - Cod.22219 -03-03-23

DONDOLINO

STANDING FRAME

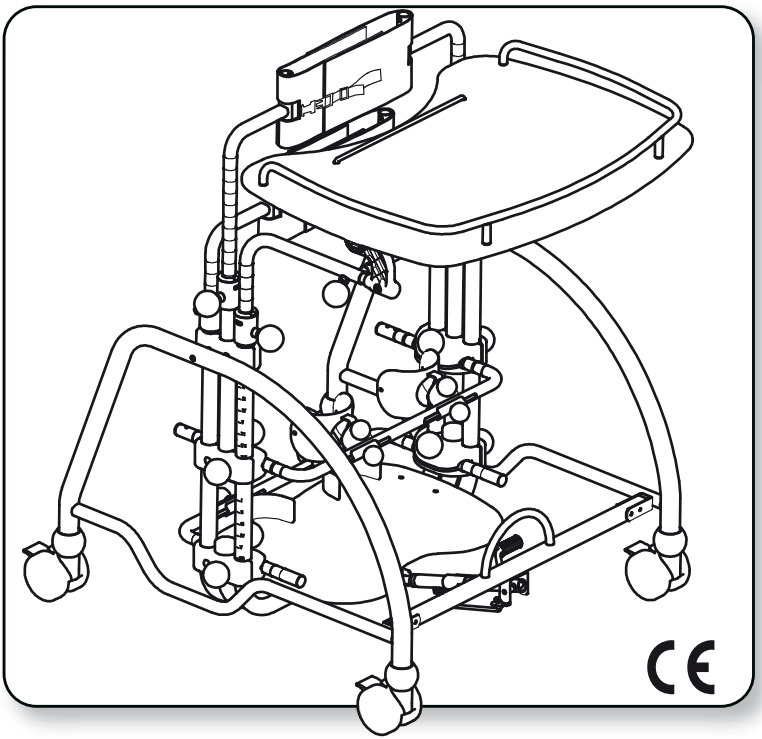

USE AND MAINTENANCE HANDBOOK

ORMESA®

• MADE IN ITALY SINCE 1980 •

ORMESA thanks you for the confidence placed in choosing our **DONDOLINO** standing frame.

DONDOLINO is a medical device designed and manufactured by ORMESA srl.

ORMESA then suggests you to read this handbook very careful to fully understand its contents. It will help you in becoming familiar with **DONDOLINO** soon and more efficaciously, and you will also find many practical advices to use it safely and in the best possible way and to keep it perfectly efficient.

Following our advice we'll help you in reaching the rehabilitation aim this aid has been designed for.

If, after reading it, you still have questions, contact your retailer, who will be happy to help you, or call ORMESA directly at +39 0742 22927, send a fax to +39 0742 22637 or send an e-mail to: info@ormesa.com

Ormesa Team

INDEX

WARNINGS 4
GUARANTEE 6
HOW TO STORE AND TRANSPORT THE MEDICAL DEVICE 6
LABELS AND PLATES 7
WHAT SHOULDN'T BE DONE WHILE USING DONDOLINO 7
HOW IS COMPOSED 8
TECHNICAL SPECIFICATIONS 8
DIMENSIONS OF DONDOLINO 9
DIMENSIONS OF DONDOLINO 10
WHAT DONDOLINO IS AND WHAT IT IS FOR 11
HOW DONDOLINO WORKS 12
INITIAL PREPARATION 13
INFORMATION ABOUT THE PACKING 13
HOW TO ASSEMBLE DONDOLINO 14
HOW TO ADJUST DONDOLINO 18
ADJUSTMENT of the FRAME in TILT 19
ADJUSTMENT of the FOOTREST in HEIGHT 20
ADJUSTMENT of the HEELREST in WIDTH 21
ADJUSTMENT of the HEELRESTS in DEPTH 22
ADJUSTMENT of the KNEE-PADS in WIDTH 23
ADJUSTMENT of the KNEE-PADS in DEPTH 24
ADJUSTMENT of the KNEE-PADS in HEIGHT 25
ADJUSTMENT of the KNEE-PADS in a ROTATORY WAY 26
ADJUSTMENT of the CHEST and PELVIC SUPPORT in its CIRCUMFERENCE 27
ADJUSTMENT of the PELVIC SUPPORT in HEIGHT 28
ADJUSTMENT of the CHEST SUPPORT in HEIGHT 29

ADJUSTMENT of the TRAY in HEIGHT **30**
ADJUSTMENT of the TRAY in DEPTH **31**
ADJUSTMENT of the TRAY in TILT **32**

MOUNTING OF ADDITIONAL COMPONENTS **33**
MULTIADJUSTABLE HEADREST 865 ..... **33**
Size 1CIRCUMFERENCE REDUCTION PARTS 944 ..... **37**

HOW TO REMOVE THE UPHOLSTERY FROM PELVIC AND CHEST SUPPORTS **39**

MAINTENANCE **40**
1. ORDINARY MAINTENANCE (monthly) 40
2. PREVENTIVE MAINTENANCE (biennial) 40
3. EXTRAORDINARY MAINTENANCE (or corrective) 41

CLEANING, DISINFECTION, SANITIZATION **42**
INFORMATION 42
WARNINGS 42
PROCEDURE 43

DISPOSAL **44**
CUSTOMER SERVICE AND SPARE PARTS **44**
CONDITIONS FOR DURABILITY, REUSE AND REASSIGNMENT TO A NEW USER **45**

⚠ WARNINGS

- **CAREFULLY READ AND UNDERSTAND THE INSTRUCTIONS IN THIS MANUAL BEFORE USING THE DEVICE BECAUSE THEY HAVE BEEN WRITTEN WITH THE USER'S SAFETY IN MIND** and they will help the carer use the product safely and keep it in good working order. The Use and Maintenance Manual is an integral part of the product and must be carefully preserved for future reference.
- **THE MANUAL IS INTENDED FOR TECHNICALLY QUALIFIED RETAILERS AND FOR USERS AND THEIR ASSISTANTS**; it provides instructions for using the product correctly and must be supplemented by adequate knowledge of the rehabilitation program for which it has been prescribed.
- **The manual reflects the technical state of the product at the time it was sold**. **ORMESA RESERVES THE RIGHT TO MAKE ANY CHANGES TO THE PRODUCT OR MANUAL** suggested by experience, technical considerations or regulatory developments without any obligation to update its previous production and relevant manuals.
- **DONDOLINO must be prescribed by a MEDICAL SPECIALIST** who will also supervise its use.
- **The effective use of DONDOLINO requires training by SPECIALIZED PERSONNEL** such as ORTHOPAEDIC TECHNICIANS, THERAPISTS OR DOCTORS.
- **ATTENTION!: ADJUST DONDOLINO to the CORRECT POSITION for its use** (see. § «**HOW TO ADJUST DONDOLINO**» pag. 18)
- **ATTENTION!: after making any type of adjustment MAKE SURE that ALL ADJJUSTABLE PARTS ARE LOCKED, in order to avoid any possible danger to the User.**
- **DONDOLINO** must only be used by **persons whose bodily measurements and weight** conform to the specifications in the paragraph **"DIMENSIONS OF DONDOLINO"** on page 9-10
- **DONDOLINO is only for INDOOR USE**
- **DONDOLINO** must be **used with the assistance and constant presence of qualified personnel or a family member.**
- **ATTENTION!: THE PRODUCT IS NOT FIREPROOF**, so keep DONDOLINO far from flames, cigarettes or fires.

DONDOLINO IS A MECHANICAL MEDICAL DEVICE:



THE USER has to perform **REGULAR MAINTENANCE** and **CLEANING** following the instructions shown in the "Maintenance" chapter on pages 40-41-42-43-44 and **HAVE THE DEVICE INSPECTED** AT THE INTERVALS INDICATED to VERIFY that it is WORKING PROPERLY and in GOOD CONDITION, otherwise warranty will fail and CE marking will lapse



PRODUCT **REPAIRS** other than the regular maintenance shown on pages 40-41-42-43-44 of the manual must be **ONLY MADE** by a **SPECIALIZED SERVICE CENTER** in the maintenance of mechanical aids for disables, otherwise warranty and CE marking will be voided



Any **CHANGES** in the product and the **REPLACEMENT WITHOUT ORIGINAL PARTS OR COMPONENTS** ARE **NOT AUTHORIZED**. REFER ONLY TO ORMESA, otherwise warranty and CE marking will be voided



In case of **DOUBT** about the **SAFETY** of the product or **DAMAGE** to parts or components, you are urged to **IMMEDIATELY DISCONTINUE USE** and **CONTACT a SPECIALIZED SERVICE CENTER** in the maintenance of mechanical aids for disables, or directly ORMESA.

⚠ GUARANTEE

ORMESA warrants DONDOLINO stander for 2 years. In case of problems, contact the retailer where you purchased it. . Always ask for original spare parts, otherwise the guarantee will decline

ORMESA will not be liable for damage in the following cases:

- *use by an unsuitable person;*
- *incorrect assembly of parts or accessories;*
- *unauthorized modifications or service;*
- *use of other than original replacement parts and parts subject to wear (upholstery, wheels, etc);*
- *improper use (such as, transporting objects or loads larger or heavier than those shown in the instruction manual);*
- *damage caused by incorrect use and lack of regular maintenance, as shown in the instruction manual;*
- *exceptional events;*
- *failure to follow the instructions in this manual.*

THE GUARANTEE DOES NOT COVER WEAR PARTS, which are subject to wear and tear, such as the upholsteries and the wheels.

⚠ HOW TO STORE AND TRANSPORT THE MEDICAL DEVICE

THE DEVICE MUST BE STORED AND PACKED using the Ormesa original packaging materials, unless the guarantee will be voided

Once unpacked, THE TRANSPORT OF THE DEVICE must be done by ANCHORING ADEQUATELY it to the vehicle

When travelling by plane, or in the car, DO NOT SUBJECT THE FOLDED FRAME TO LOADS THAT, especially with road bumps, COULD DAMAGE ITS STRUCTURE

THE DEVICE MUST BE PARKED / STORED IN CLOSED AND DRY PLACES

The operating environment has no particular influence on the device unless it is used incorrectly, such as by leaving it parked for a long time in direct sunlight or exposed to bad weather such as rain, or in marine environments, where the salt air could corrode the paint and sliding parts. In this case, we recommend carefully cleaning and drying the frame following the instructions shown in the "Maintenance, Cleaning and Disinfection" chapter on pages 40-41-42-43-44 AND THE WARNINGS ⚠ ON PAGE 40

LABELS AND PLATES

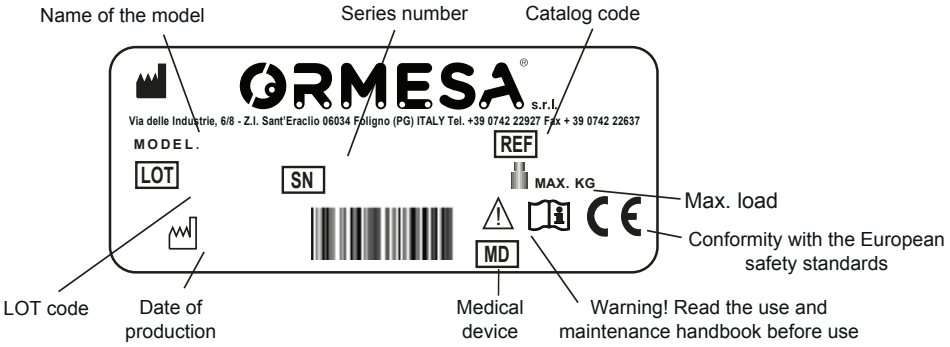

THE CE MARKING CERTIFIES THAT DONDOLINO STANDER CONFORMS TO THE SAFETY REQUIREMENTS defined with the REGULATION (EU) 2017/745 OF THE EUROPEAN PARLIAMENT AND OF THE COUNCIL of 5 April 2017 applicable for MEDICAL DEVICE

WHAT SHOULDN'T BE DONE WHILE USING DONDOLINO

- **DONDOLINO has to be used by those children whose bodily size and weight are just like the ones we specify: it has to be prescribed by a specialized doctor according to the laws, standards and rules in force**
- **Never put the aid on a slope**
- **Never lift the standing frame in order to move it while the User is using it**
- **Don't put anything too hot on the tray because the wood or covering could be hardly damaged**
- **In order to adjust the parts while the user is using it scrupulously follow the par-agraph § "HOW TO ADJUST DONDOLINO" on page 18 of the Use and Mainte-nance Handbook**
- **Never let the user** alone on the aid
- **DONDOLINO has not been designed for the outdoor use unless it is on flat paved ground, well sheltered from bad weather**
- **Never leave the aid under the sun for a long time or near heat sources. This will avoid its overheating and the discoloration of the padded parts**
- **Never use the product if there are damaged or missing parts**

HOW IS COMPOSED

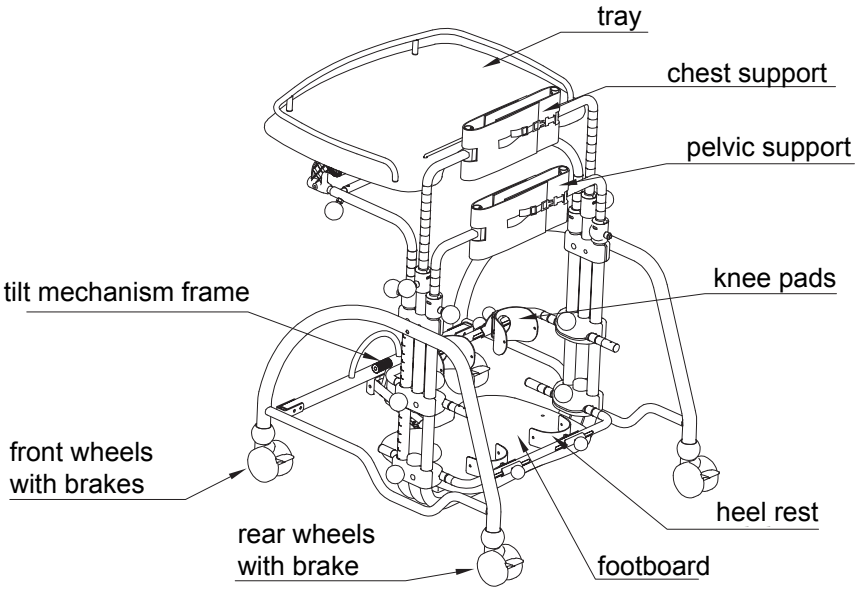

TECHNICAL SPECIFICATIONS

- **DONDOLINO is available in three sizes** (see page 9)
- **FRAME** varnished with non-toxic epoxy-powder paint and with chromium-plated and adjustable parts. It is adjustable in tilt
- **TRAY** in multilayer wood. It is adjustable in height, tilt and depth. It can be removed
- **KNEE-PADS** adjustable in height, width, depth and in a rotatory movement
- **HEELRESTS** adjustable in depth and width
- **MULTILAYER WOOD BASE** adjustable in height
- **PELVIC SUPPORT** adjustable in its circumference thanks to Velcro straps, in height, back and forward
- **CHEST SUPPORT** adjustable in its circumference thanks to Vel-cro straps and in height
- Unpierceable **WHEELS**, diam. 75 mm, with brakes. Thanks to the wheels the aid can be moved from one room to another with the User

DIMENSIONS OF DONDOLINO

Measures in cm Weights in Kg

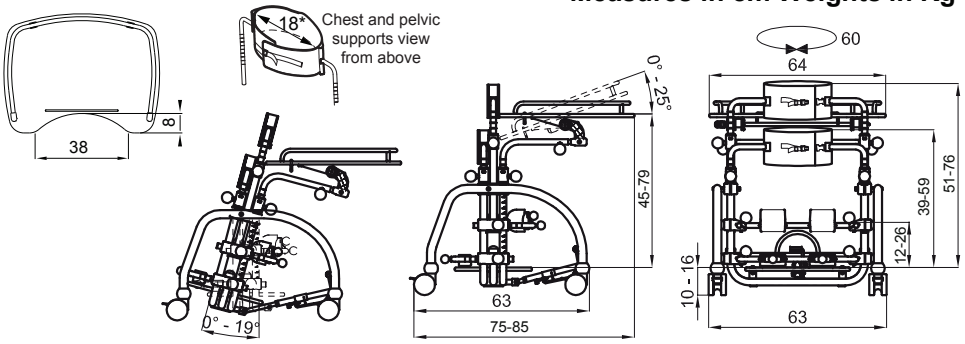

DONDOLINO-1	WEIGHT OF THE AID Kg. 21	MAX. LOAD Kg. 35

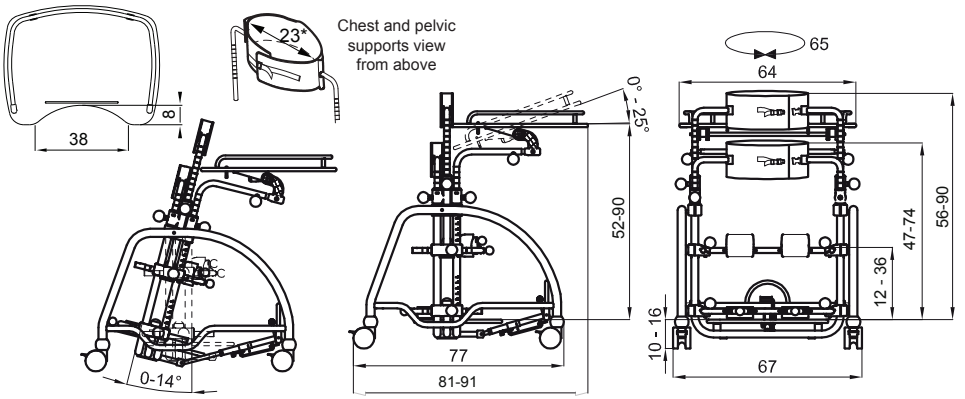

DONDOLINO-2	WEIGHT OF THE AID Kg. 24	MAX. LOAD Kg. 45

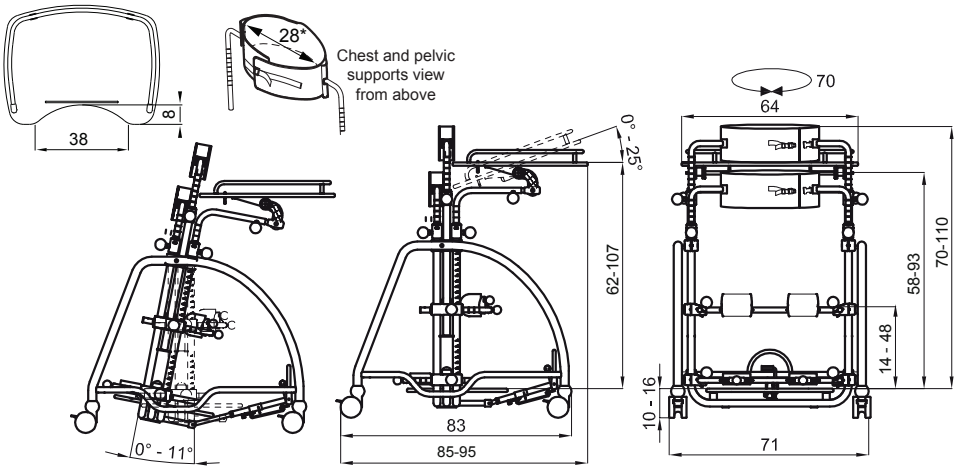

DONDOLINO-3	WEIGHT OF THE AID Kg. 26	MAX. LOAD Kg. 55

** Distance to be considered with **aligned bars***

DIMENSIONS OF DONDOLINO Measures in Inches Weights in Lbs

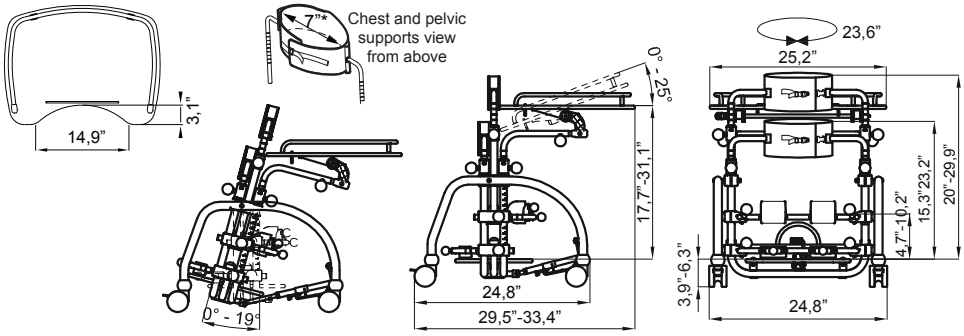

DONDOLINO-1 **WEIGHT OF THE AID Lbs. 42,6** **MAX. LOAD Lbs. 77,1**

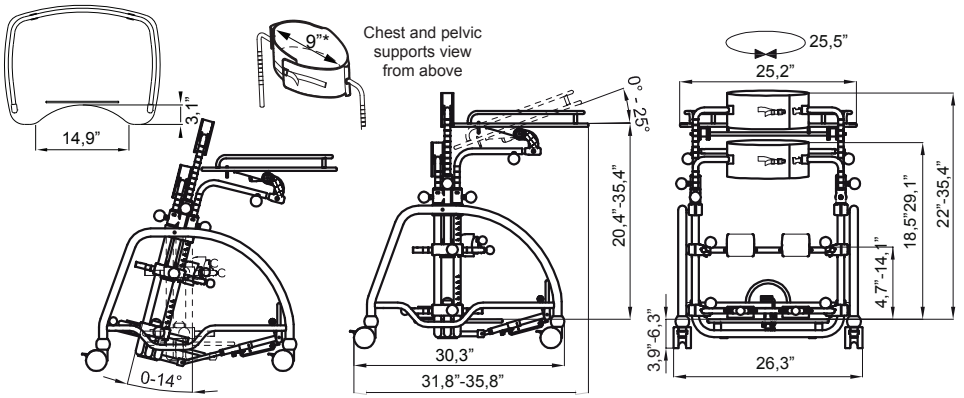

DONDOLINO-2 **WEIGHT OF THE AID Lbs. 52,9** **MAX. LOAD Lbs. 99,2**

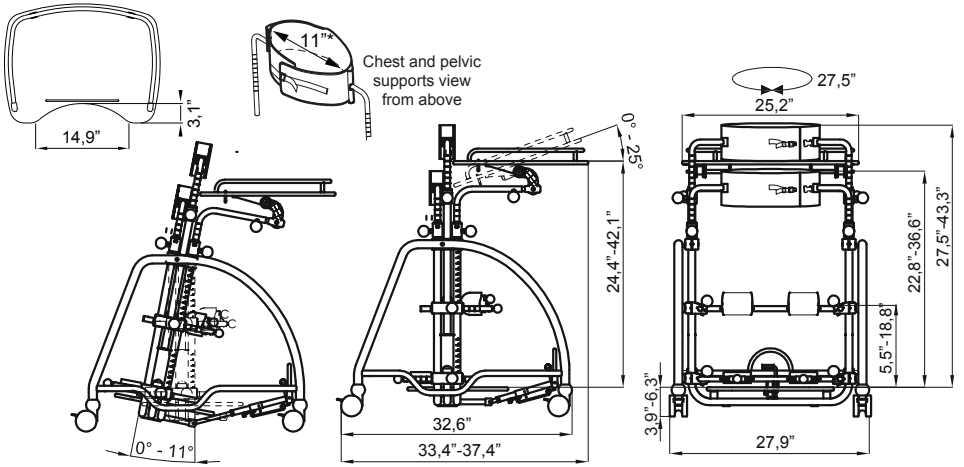

DONDOLINO-3 **WEIGHT OF THE AID Lbs. 57,3** **MAX. LOAD Lbs. 121,2**

** Distance to be considered with **aligned bars***

WHAT DONDOLINO IS AND WHAT IT IS FOR

DONDOLINO IS A STANDING FRAME DESIGNED AND MANUFACTURED TO HELP CHILDREN FROM 1 TO 10 YEARS OLD TO ACHIEVE AND MAINTAIN AN UPRIGHT POSITION.

DONDOLINO HAS BEEN DESIGNED AND MANUFACTURED :

- for training and achieving an independent upright position
- to maintain a vertical position with a two-foot load, as an alternative to an independent position that would otherwise be impossible

It is important to remember that:
- the upright position is the ideal antigravity posture for human beings. It represents the conquest of a two-legged bearing that thus frees the upper limbs and hands from acting as support and protection
- what we mean by posture is the body's constant relation with its environment, achieved by maintaining a balance between the elastic forces of the protagonist and antagonist muscles, and between the body's inner forces and the forces exerted on it by the outside environment
- posture is maintained by integrating visual, vestibular and somatic-sensory proprioceptor information

DONDOLINO is an aid that allows this information to be integrated and facilitates this process

MORE SPECIFICALLY AN APPROPRIATE USE OF DONDOLINO CAN FACILITATE:

- gaining experience with a posture that can act as an alternative to the one that has been "forced" or "partially forced" on the child by his pathology, as well as enabling proper placement of the joints so that controlled and modulated variations can be introduced. **The aim of all this is to prevent from deformity**
- Training the antigravity musculature
- **controlling and straightening the head.** Conditions that are facilitated by the reduced antigravity involvement of the trunk: this is achieved thanks to the table which is considered as an adjustable chest support (the table can be removed once adeguate control of the trunk has been attained)
- **Experiencing visually guided manual activity.** Thanks to this it is possible to integrate the visual information drawn from the objects with the information coming from the child's own body when it is in the correct posture
- **Therefore this involves the possibility of grasping, catching and exploring,** initially on an
- overall level and then selectively, and handling through simple or complex constructive activities,
- using objects.
- This is also facilitated by the fact that the upper limbs have been relieved of their protective and support functions

IN ADDITION, THE UPRIGHT POSTURE ALSO ENABLES THE FOLLOWING:

A – **IMPROVED RESPIRATORY CAPACITY** through increased ventilation and a decrease in obstructive phenomena

B – **IMPROVED PERISTALSIS**

C – **IMPROVED CIRCULATION**

Above all it is important to emphasize that **DONDOLINO** Is an **AID THAT CAN ENHANCE THE CHILD'S CAPACITY TO ADAPT TO HIS SURROUNDINGS,** or in other words, to interact positively with the world around him.

This will ultimately lead to MORE PERSONAL AUTONOMY, so that the child can establish good relations with himself, with the others and with his physical environment: his skill at "getting in touch with".

HOW DONDOLINO WORKS

It works very simply and safely.

DONDOLINO is a standing frame composed of a lateral frame that **is graduated so that its height can be easily adjusted.**

When the child is standing he is supported by wide straps across the pelvis and trunk that can be adjusted from the front to the back (to follow knee-hip flexion) as well as in its circumference.

Two front knee pads and two heel rests fix the position of the lower limbs. **The physiatrist and/or therapist must continuously monitor the child's position on the DONDOLINO.**

In fact **DONDOLINO** is used by disabled children during their developmental period. Since they grow up quickly and they can also change in terms of their pathological picture, this entails constant assessment and adjustment.

ATTENTION: Before starting to position the child, brake the wheels of DONDOLINO!

When starting it is advisable to have an adult stand behind the child and hold his sides firmly if the child has an adequate control of the trunk. Otherwise, the child should be supported by his armpits.

The therapist should temporarily position the lower limbs first, followed by the pelvis and the chest. At this point, always attempting to get the child cooperate as actively as possible and explaining him what is being done and why, the position of the feet in the heel rests and knee pads must be controlled,

following any flexion that may be present. Subsequently, the pelvis must be controlled through the pelvic support and then, the trunk must be controlled using the chest support.

It is important to pay special attention to "dosing" the right amount of chest and pelvic support. There must be an adeguate support to assure a minimum amount of stability.

Avoid any **excessive support** since it **could give the child a heavy feeling of "confinement".** At the same time, however, the support must not be too **"light"** since **this could cause a reaction of " fear of falling" or instability.**

If the child is able to communicate, it is important to listen to his feelings and impressions so that the amount of restraint can be "modulated" as correctly as possible.

Always bear in mind that **DONDOLINO** is a standing frame that must allow the child to carry out several activities and that it was not designed to keep him still and immobilized. This is the main objective that must be taken as a guideline in using this aid, which should work as a tool " to do things in a correct and favourable position".

Naturally the correct posture will be different from one child to another according to their age, motor picture and overall picture.

INITIAL PREPARATION

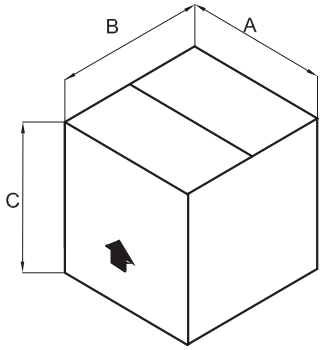

INFORMATION ABOUT THE PACKING

STANDING FRAME	A cm	B cm	C cm	VOLUME m^3	WEIGHT kg
DONDOLINO 1	70	66	70	0,323	21
DONDOLINO 2	80	80	84	0.537	28
DONDOLINO 3	80	85	93	0.632	31

STANDING FRAME	A Inches	B Inches	C Inches	VOLUME $Inches^3$	WEIGHT Lbs.
DONDOLINO 1	27,5”	25,9”	27,5”	19.710	46
DONDOLINO 2	31,5”	31,5”	33”	32.769	61
DONDOLINO 3	31,5”	33,5”	36,6”	38.567	68

HOW TO TAKE DONDOLINO OUT OF THE CARTON

ATTENTION!
CUT WITHOUT PRESSING TOO HARD WITH THE BLADE SO AS NOT TO DAMAGE THE CONTENTS OF THE BOX

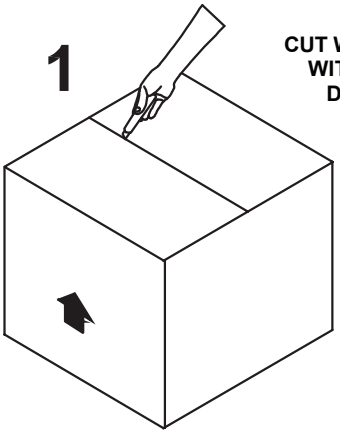

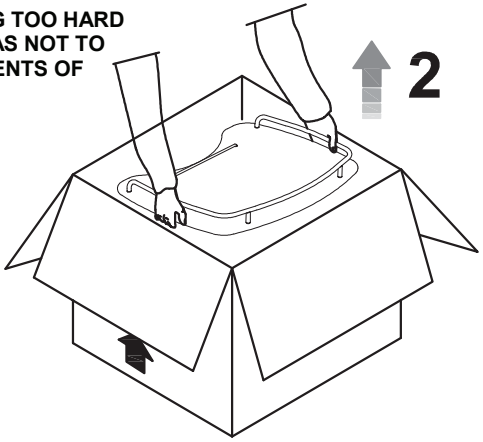

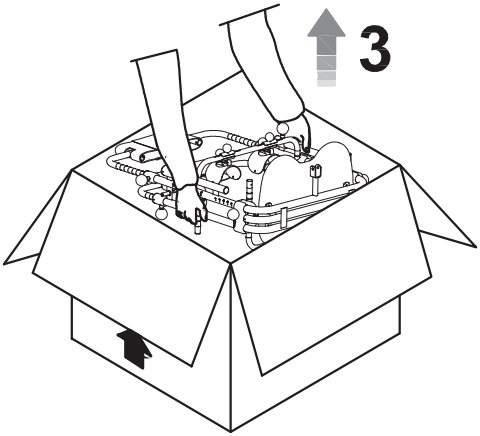

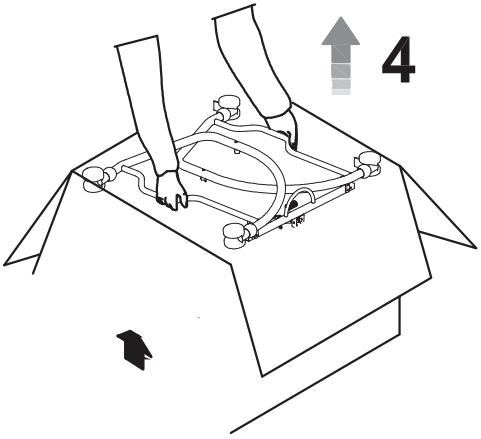

HOW TO ASSEMBLE DONDOLINO

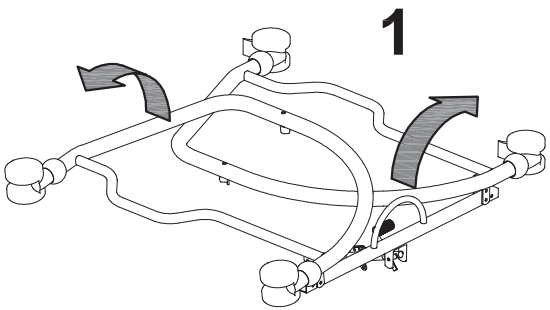

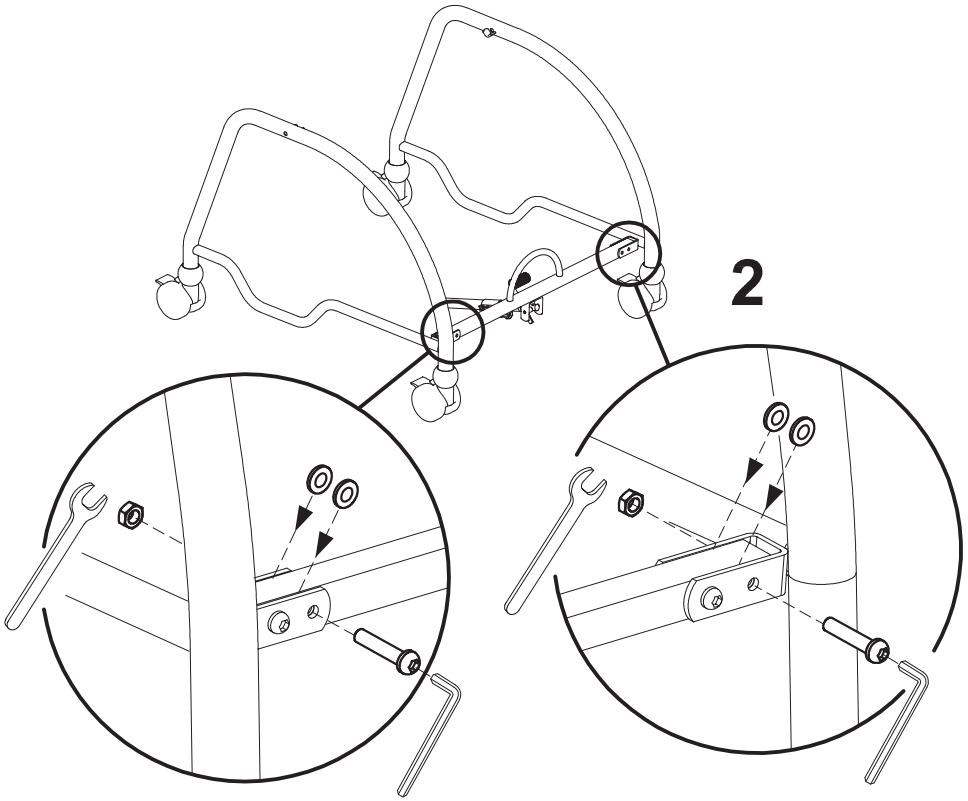

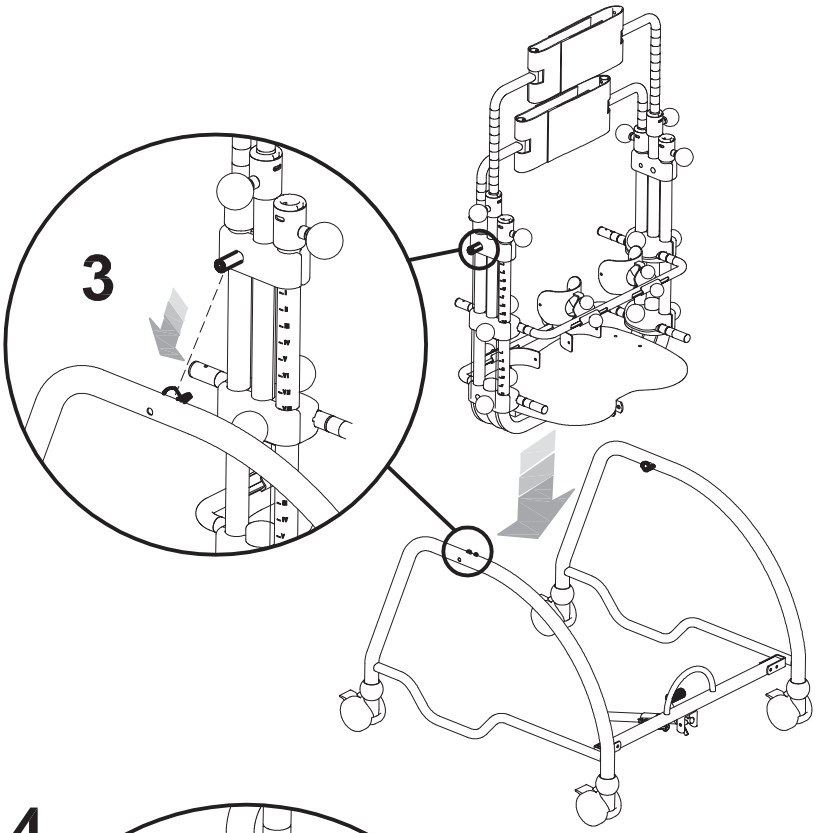
3

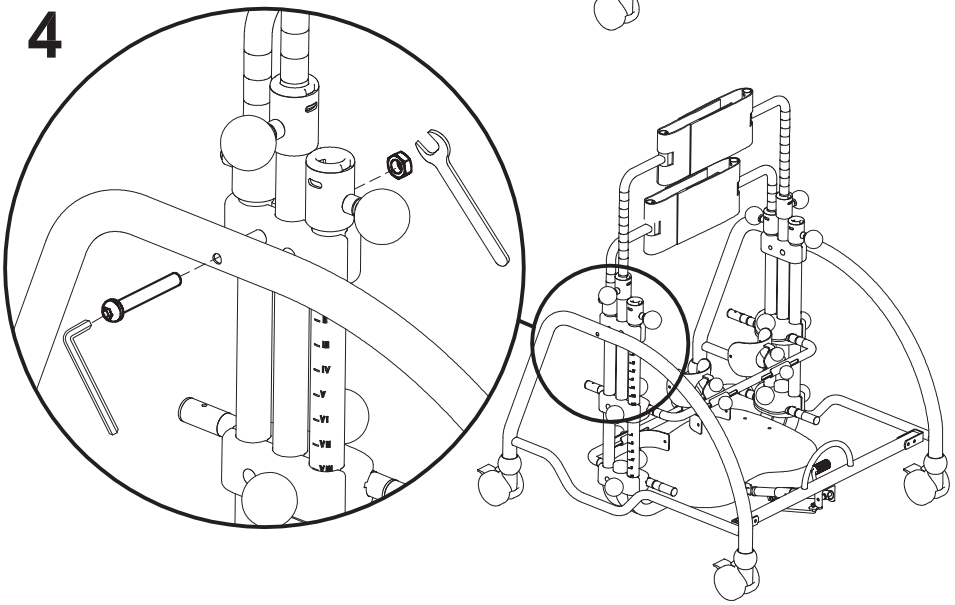
4

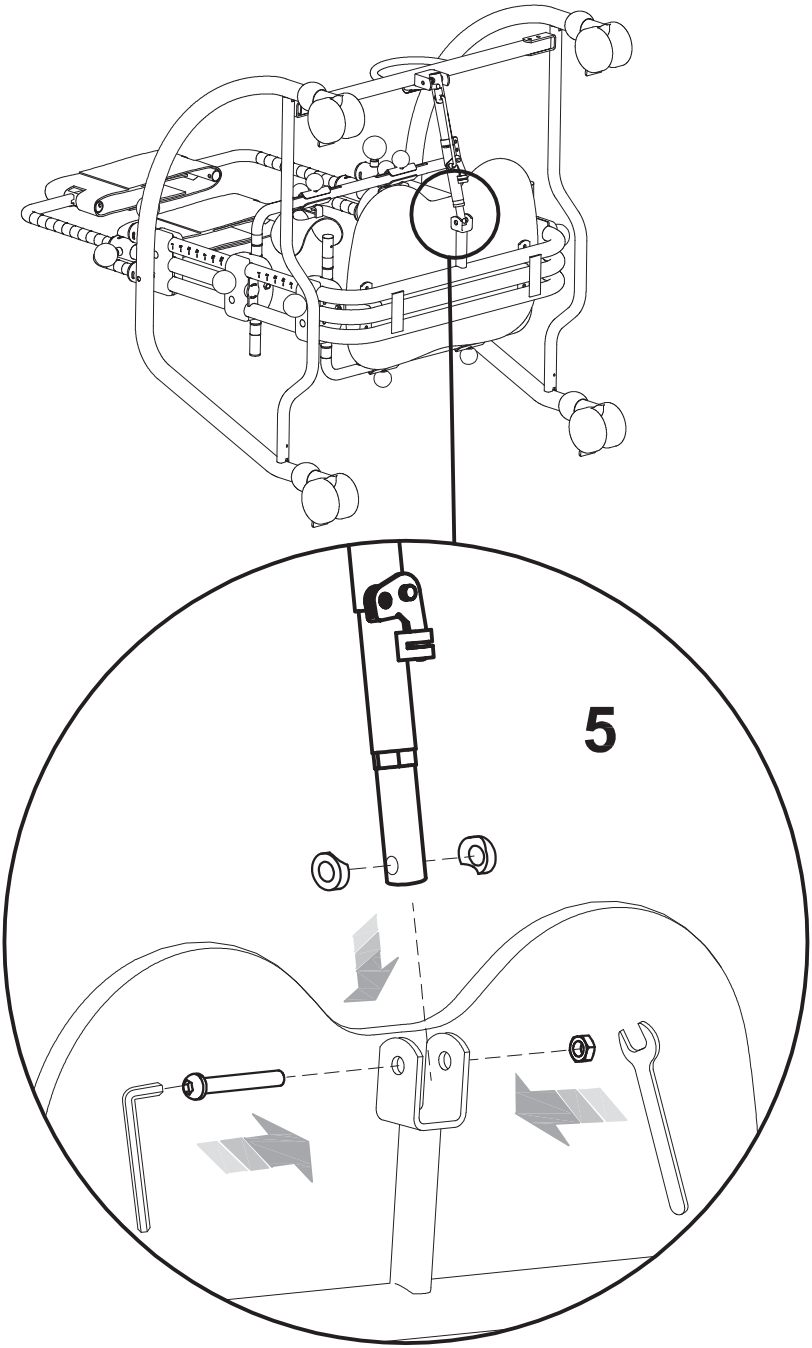
5

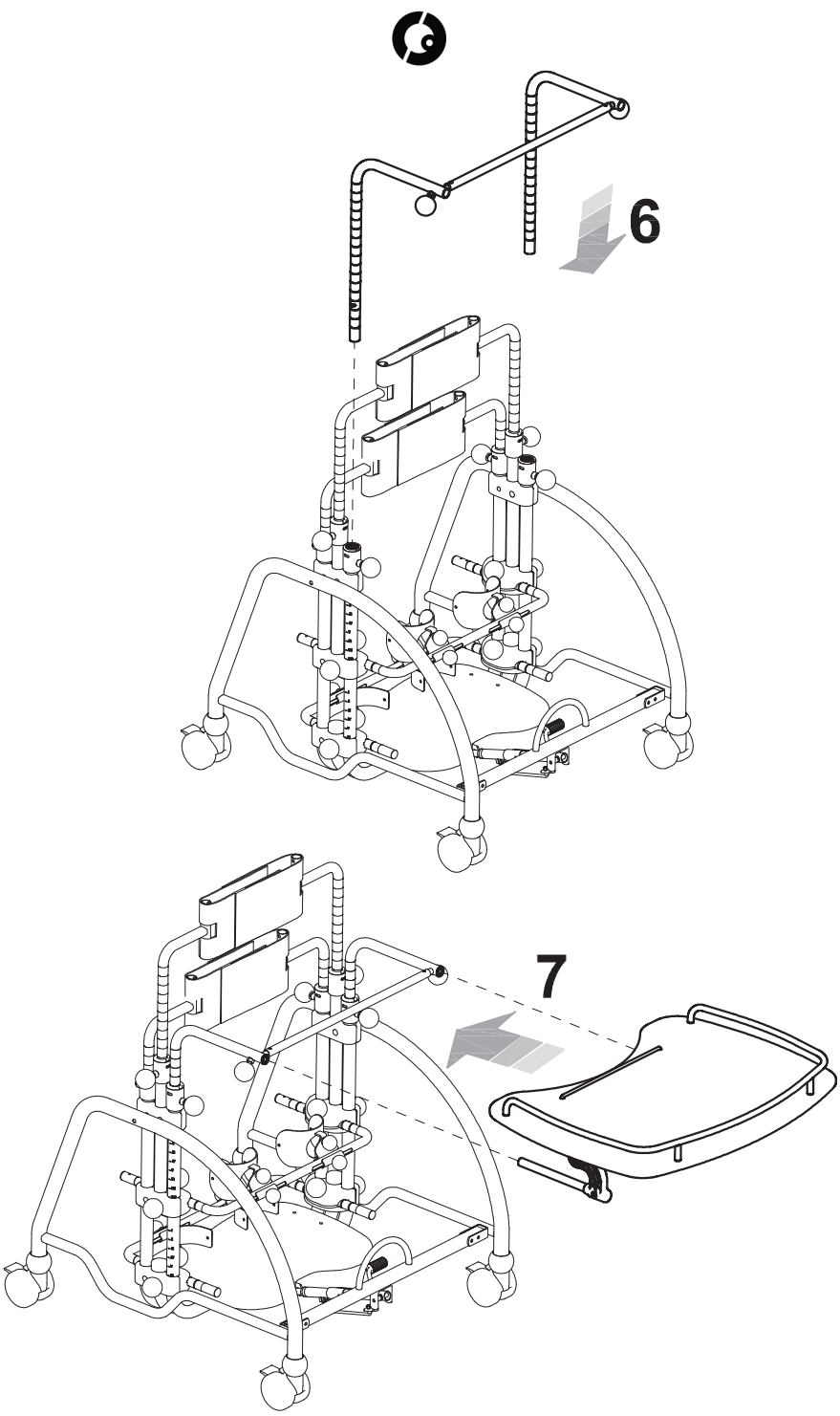
6
7

HOW TO ADJUST DONDOLINO

WHILE ADJUSTING THE STANDING FRAME IT IS IMPORTANT TO FOLLOW THREE PHASES AND IT MUST BE ADJUSTED UNDER THE DIRECT CONTROL OF THE DOCTOR WHO PRESCRIBES IT

1ST. PHASE: YOU HAVE TO CONSIDER:

1. **the height of the child from under his chest to the ground** is needed to fix the chest support;
2. **the height from the knee-cap to the ground** is needed to fix the knee-pads of the standing frame;

You can measure while the child is standing or while he is laying.

2ND. PHASE: INITIAL ADJUSTMENT WITHOUT THE CHILD AND CONSIDERING THE MEASURES THAT YOU MUST MEASURE BEFORE

3RD. PHASE: SUBSEQUENT ADJUSTMENT WITH THE CHILD

Check:

1. **that the back strap, once it is closed, is in the middle of the bottom.** The height of the **arm supports** depends on the position of the back support of the pelvis;
2. **the position of the knee-pads;**
3. **the position of the heel rests** in width and depth;
4. **the position of the tray.** It must be fixed controlling the height of the User from under his elbow to the ground (minimum height). Shouldn't it be possible to make this control, you can measure the distance from the bended elbow to his feet while the User is laying.
5. **the vertical alignment of the chest and pelvis**
6. **the flexion of the limbs: the vertical position is determined by the front and back adjustment of the pelvis support, of the knee-pads and of the heel rests.**

WARNINGS : ALL THE ADJUSTABLE PARTS MUST HAVE BEEN WELL LOCKED!!!
Always check that all the adjustments have been correctly fixed in order to avoid any possible danger to the User.

WARNINGS:
THE ADJUSTMENTS MUST BE ALWAYS CONTROLLED BY THE DOCTOR WHO PRESCRIBES THE AID AND BY THE THERAPIST WHENEVER THEY THINK IT IS NEEDED. THIS IS IMPORTANT TO OPTIMIZE THE VERTICAL POSITION BECAUSE THE RIGHT USE OF THE STANDING FRAME CONDITIONS THE FLEXION OF THE USER AND IT REDUCES HIS RIGIDITY

ADJUSTMENT of the FRAME in TILT

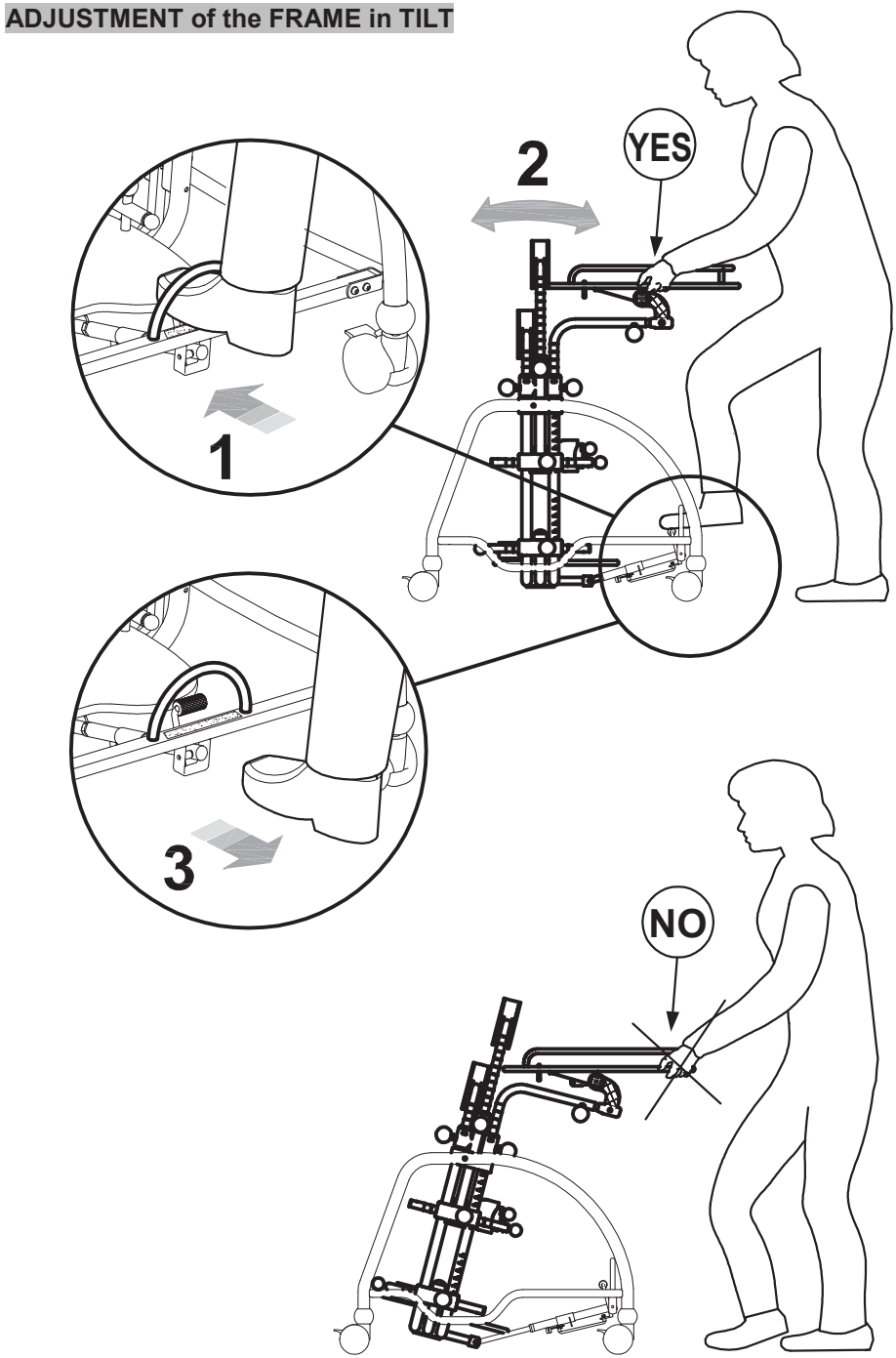

ADJUSTMENT of the FOOTREST in HEIGHT

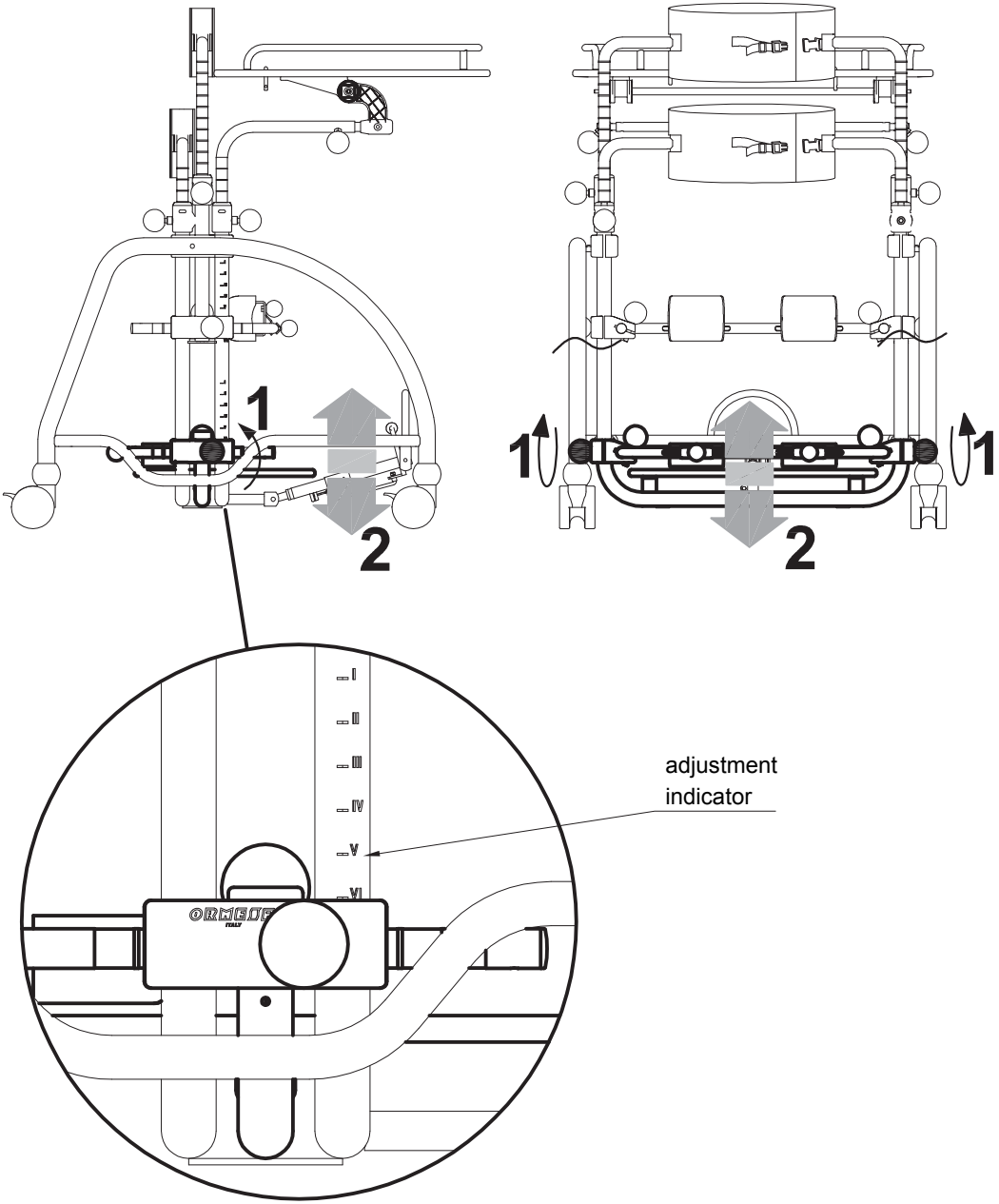

ADJUSTMENT of the HEELREST in WIDTH

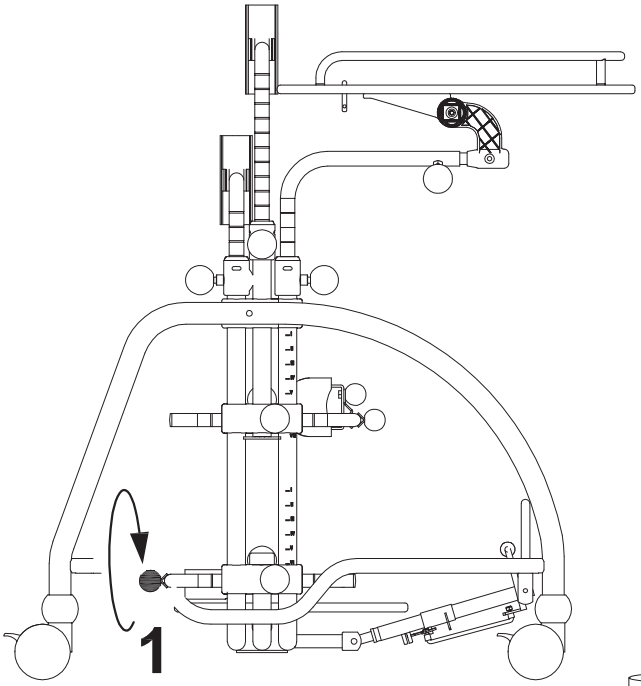

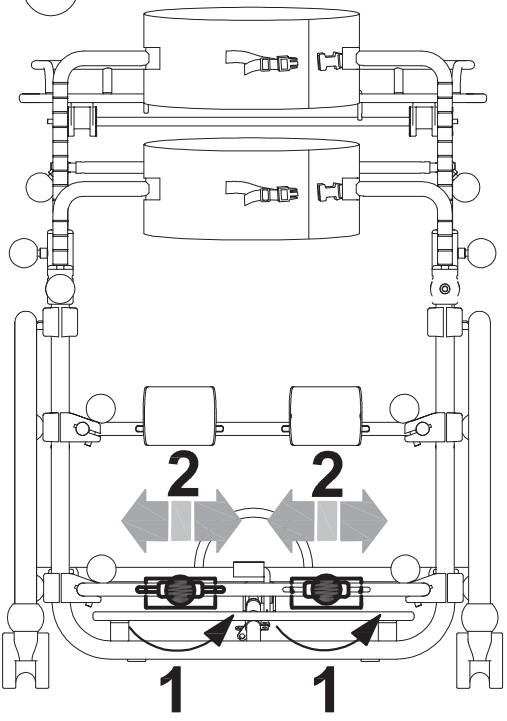

ADJUSTMENT of the HEELRESTS in DEPTH

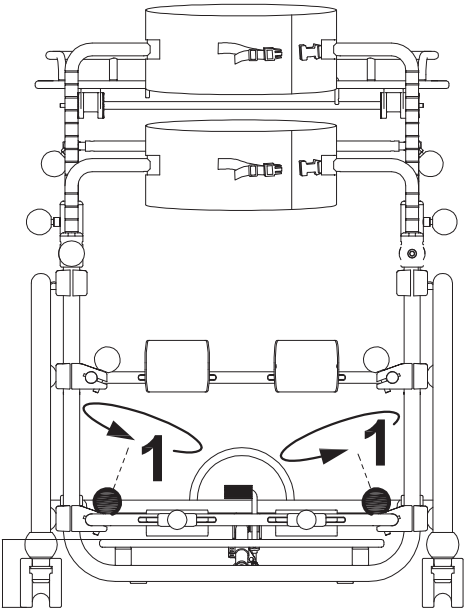

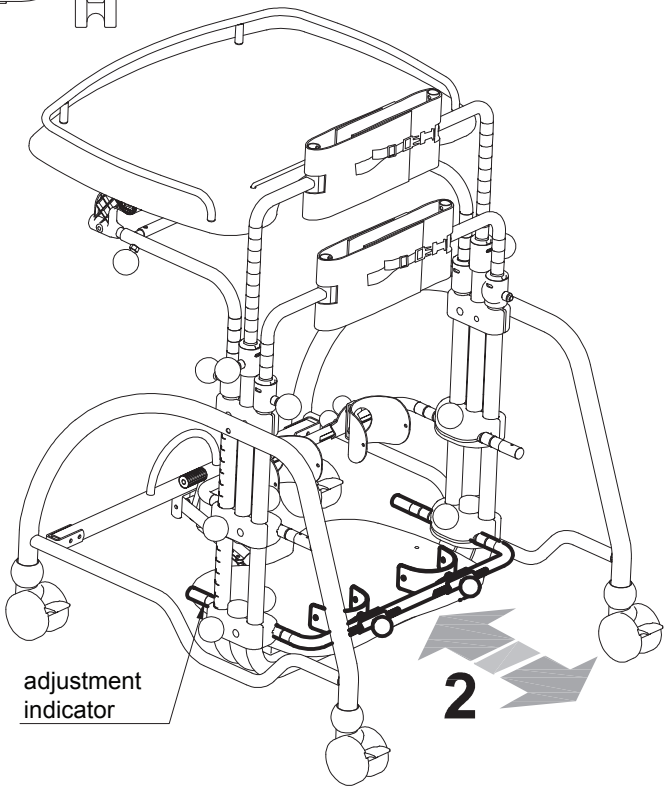

ADJUSTMENT of the KNEE-PADS in WIDTH

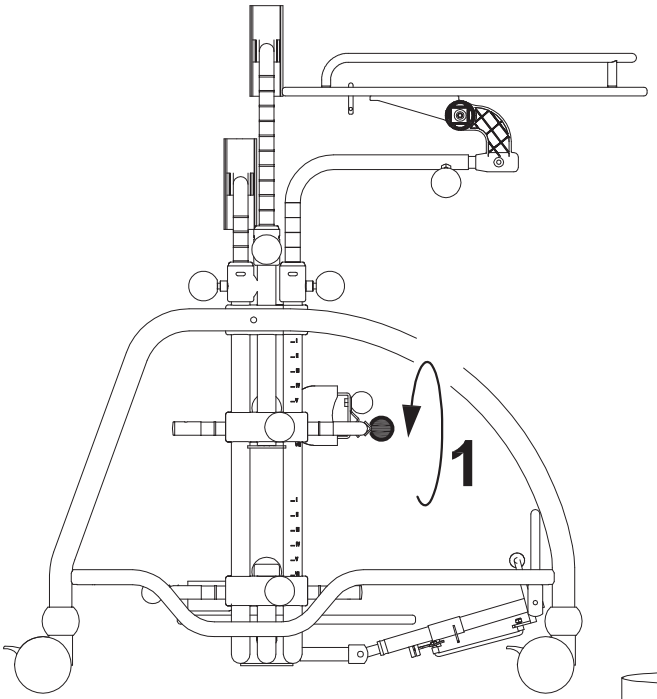

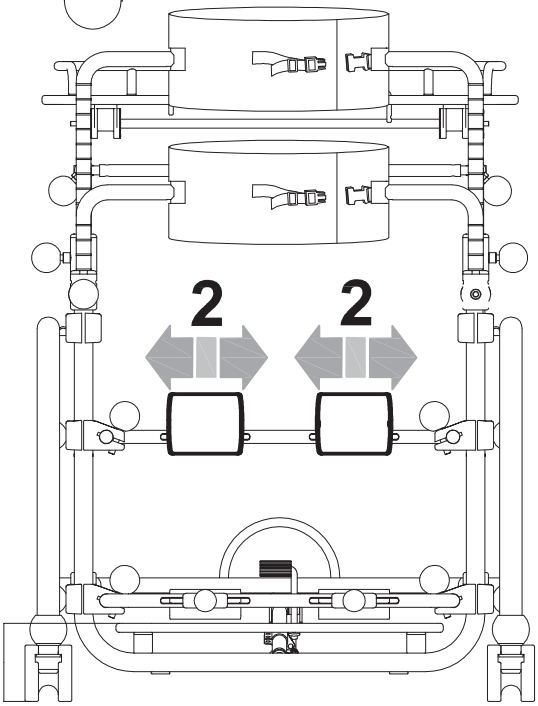

ADJUSTMENT of the KNEE-PADS in DEPTH

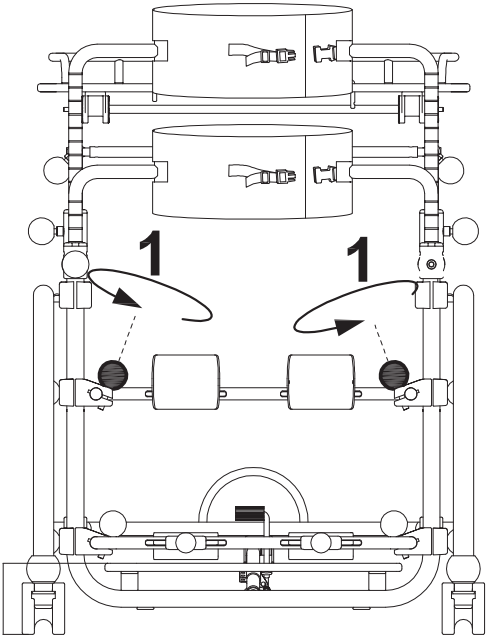

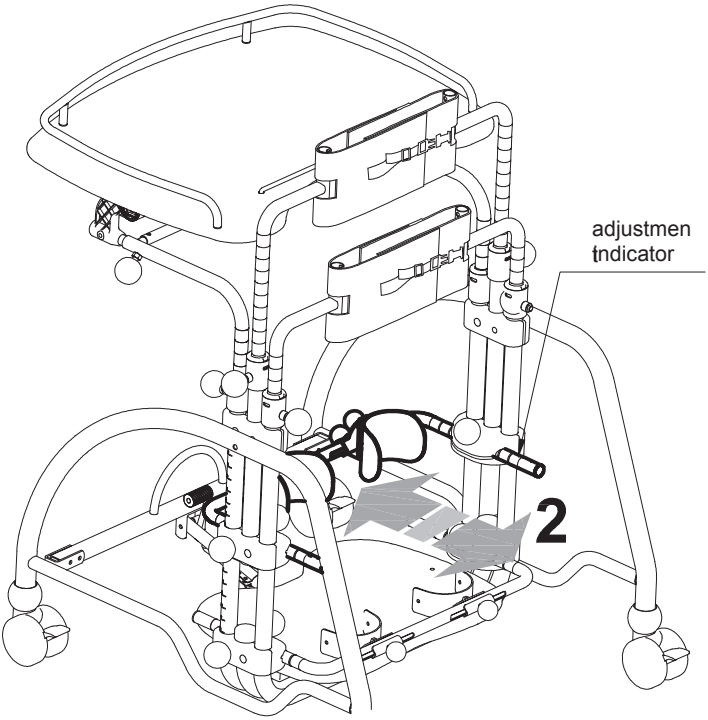

ADJUSTMENT of the KNEE-PADS in HEIGHT

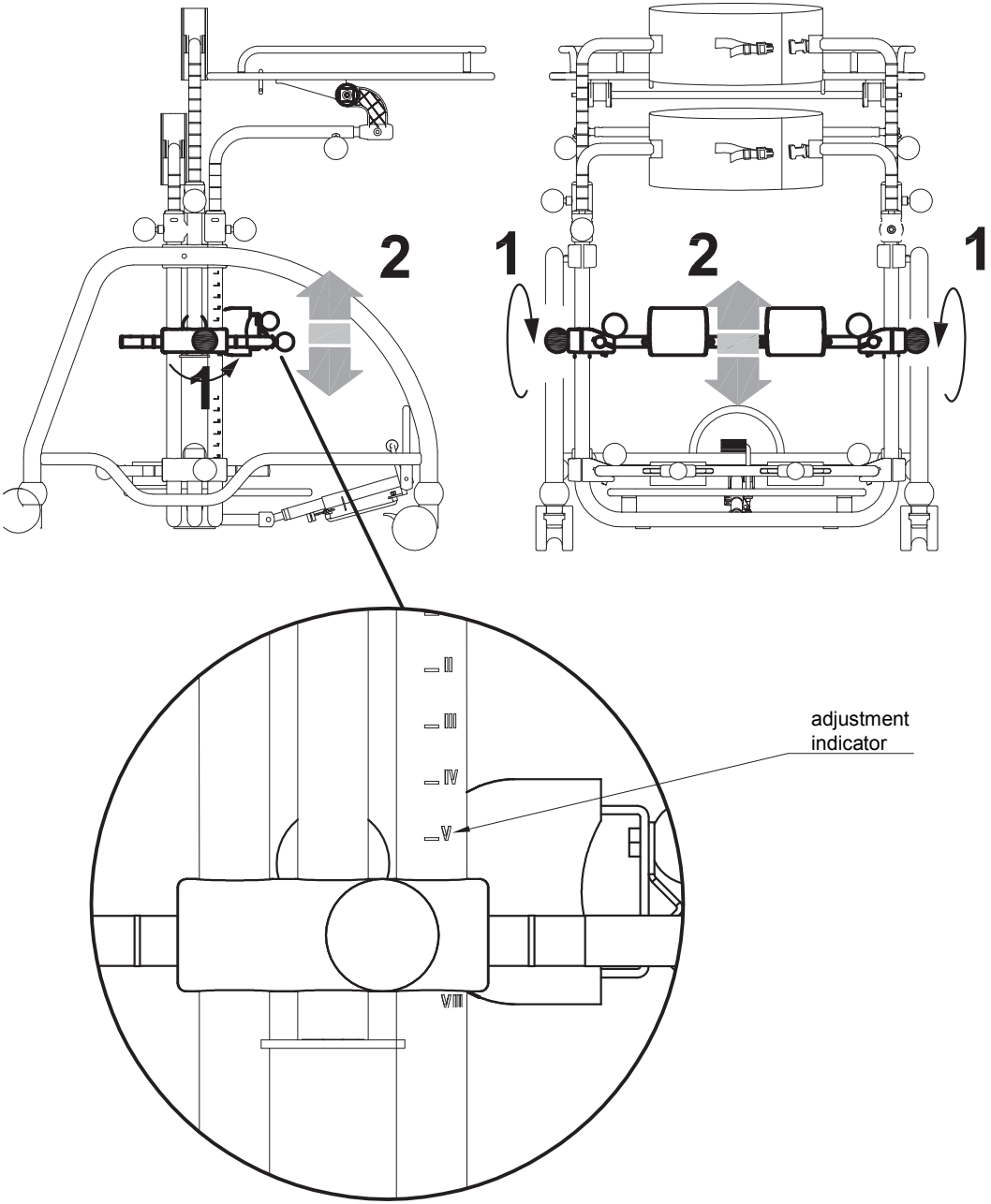

ADJUSTMENT of the KNEE-PADS in a ROTATORY WAY

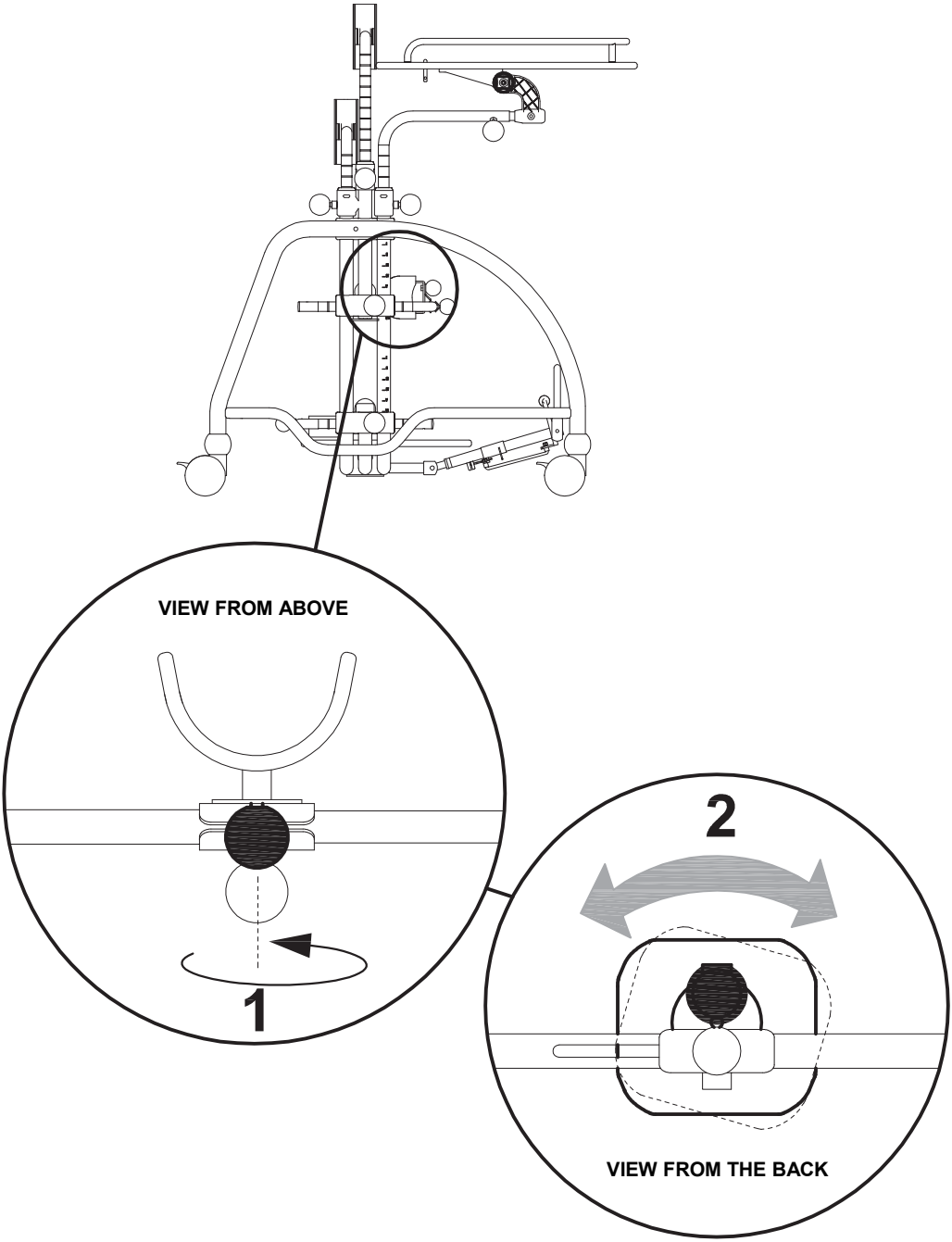

ADJUSTMENT of the CHEST and PELVIC SUPPORT in its CIRCUMFERENCE

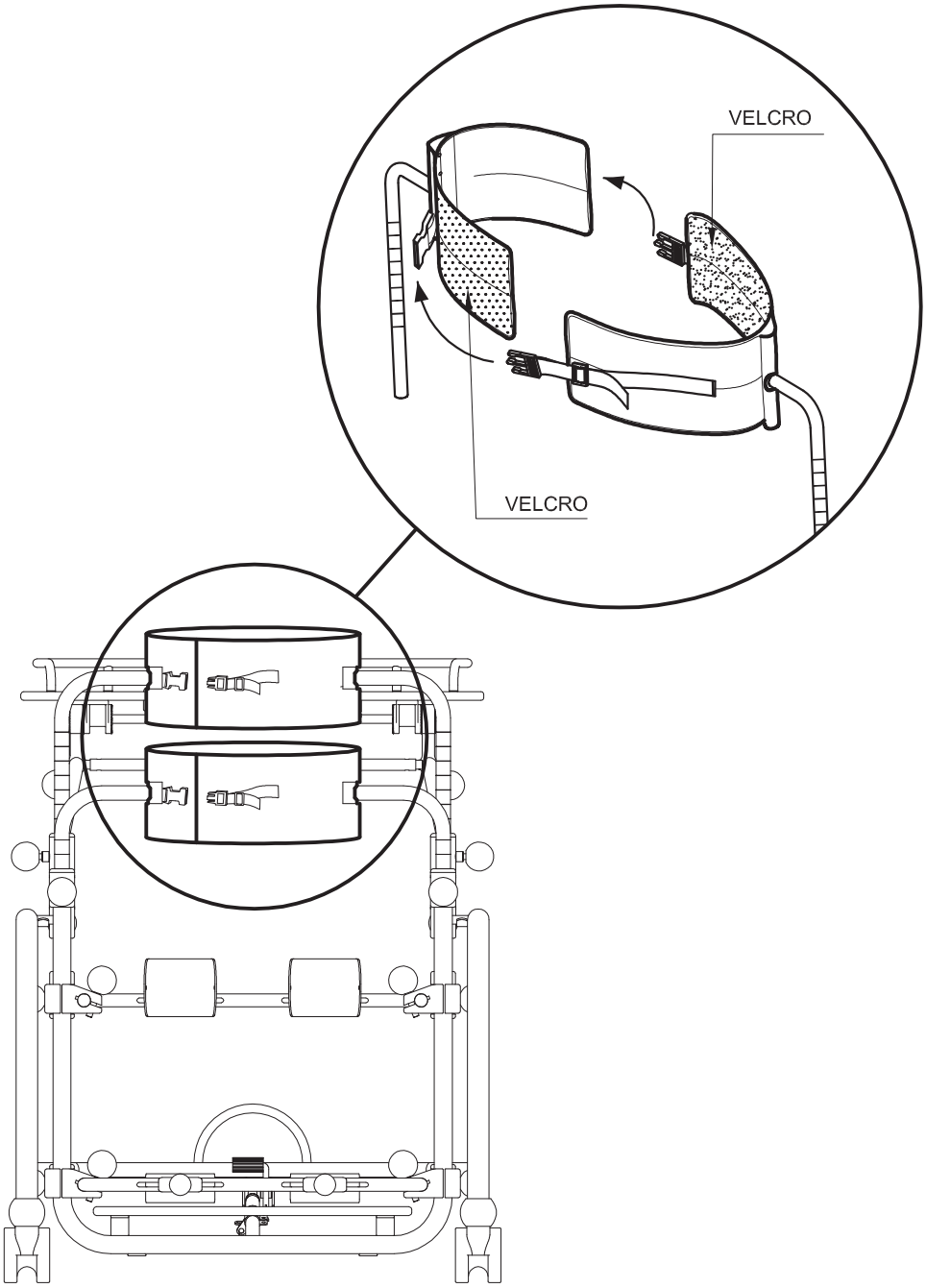

ADJUSTMENT of the PELVIC SUPPORT in HEIGHT

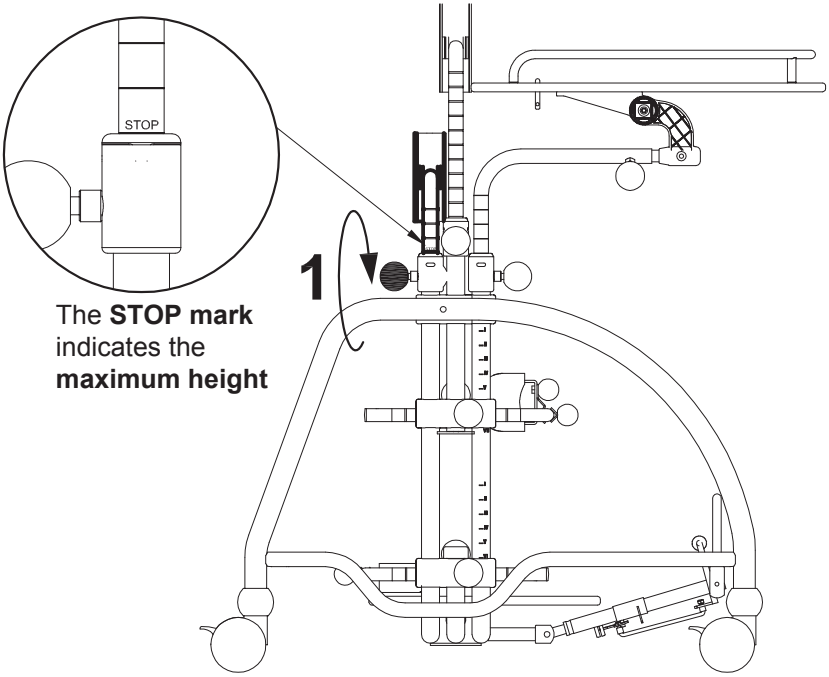

The **STOP mark** indicates the **maximum height**

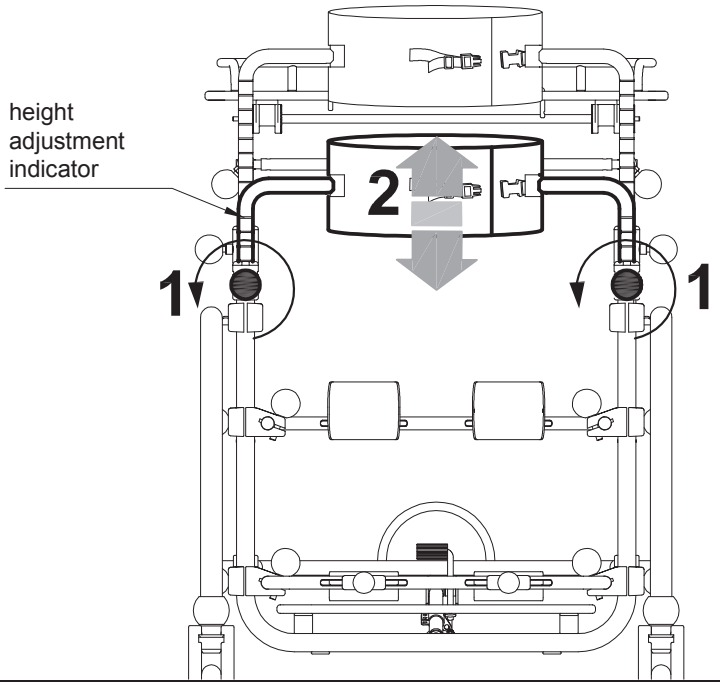

ADJUSTMENT of the CHEST SUPPORT in HEIGHT

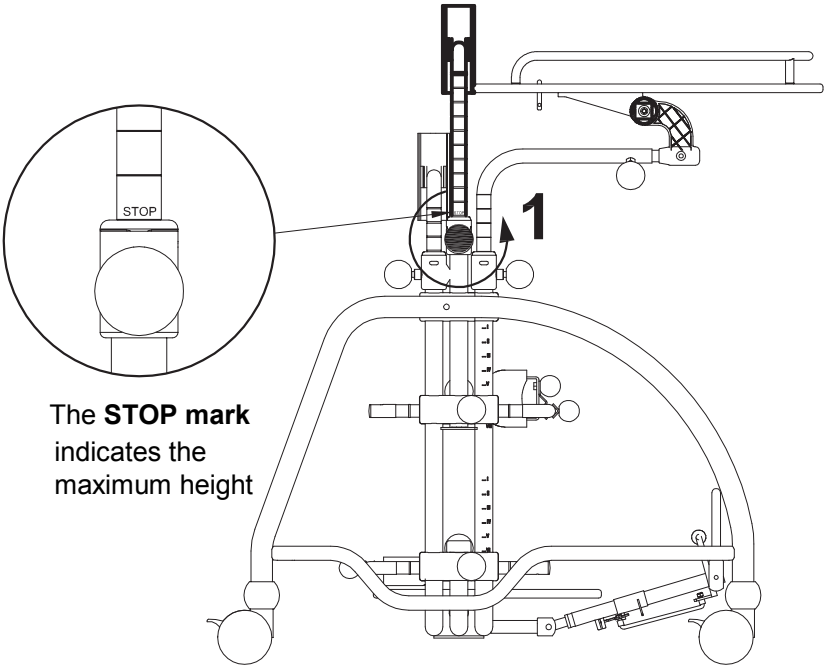

The **STOP mark** indicates the maximum height

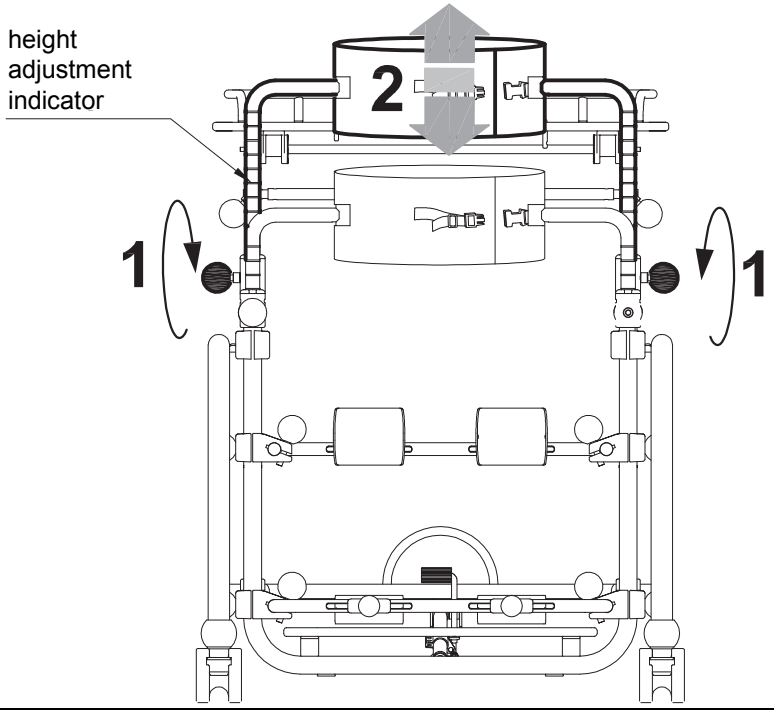

ADJUSTMENT of the TRAY in HEIGHT

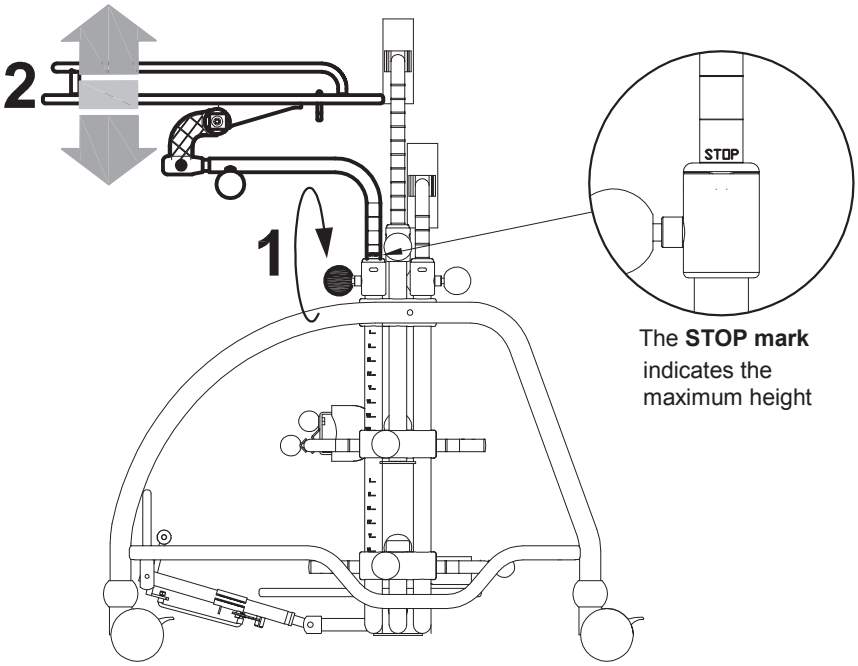

The **STOP mark** indicates the maximum height

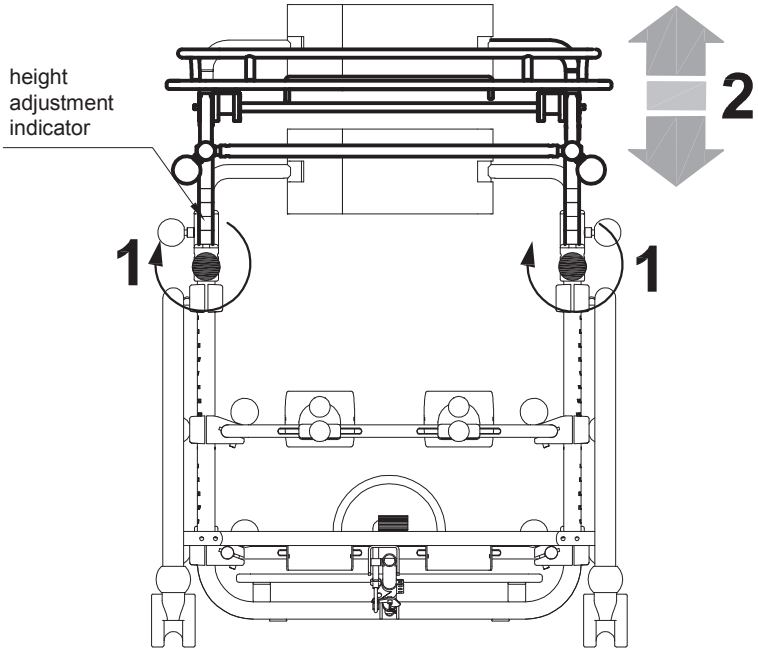

ADJUSTMENT of the TRAY in DEPTH

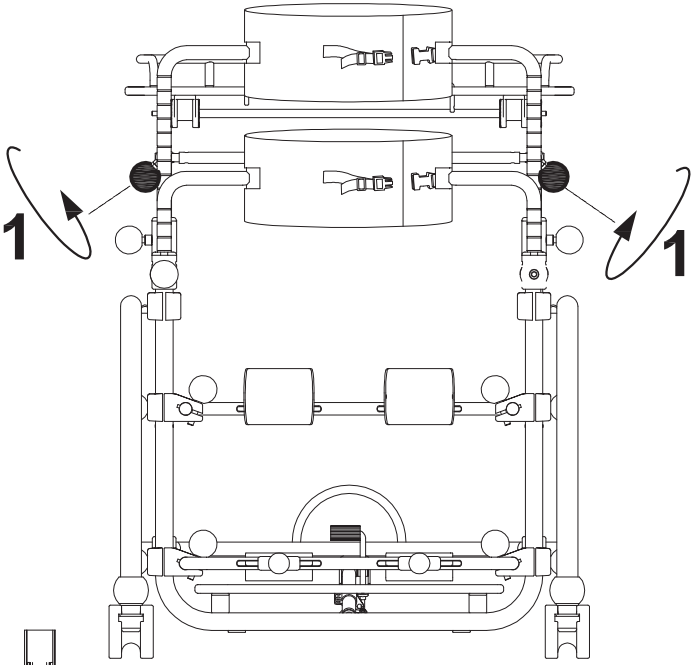

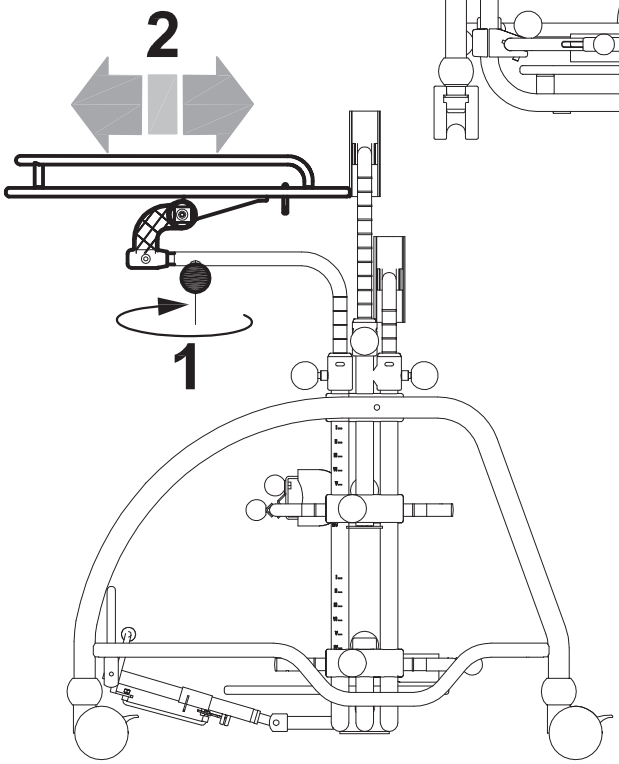

ADJUSTMENT of the TRAY in TILT

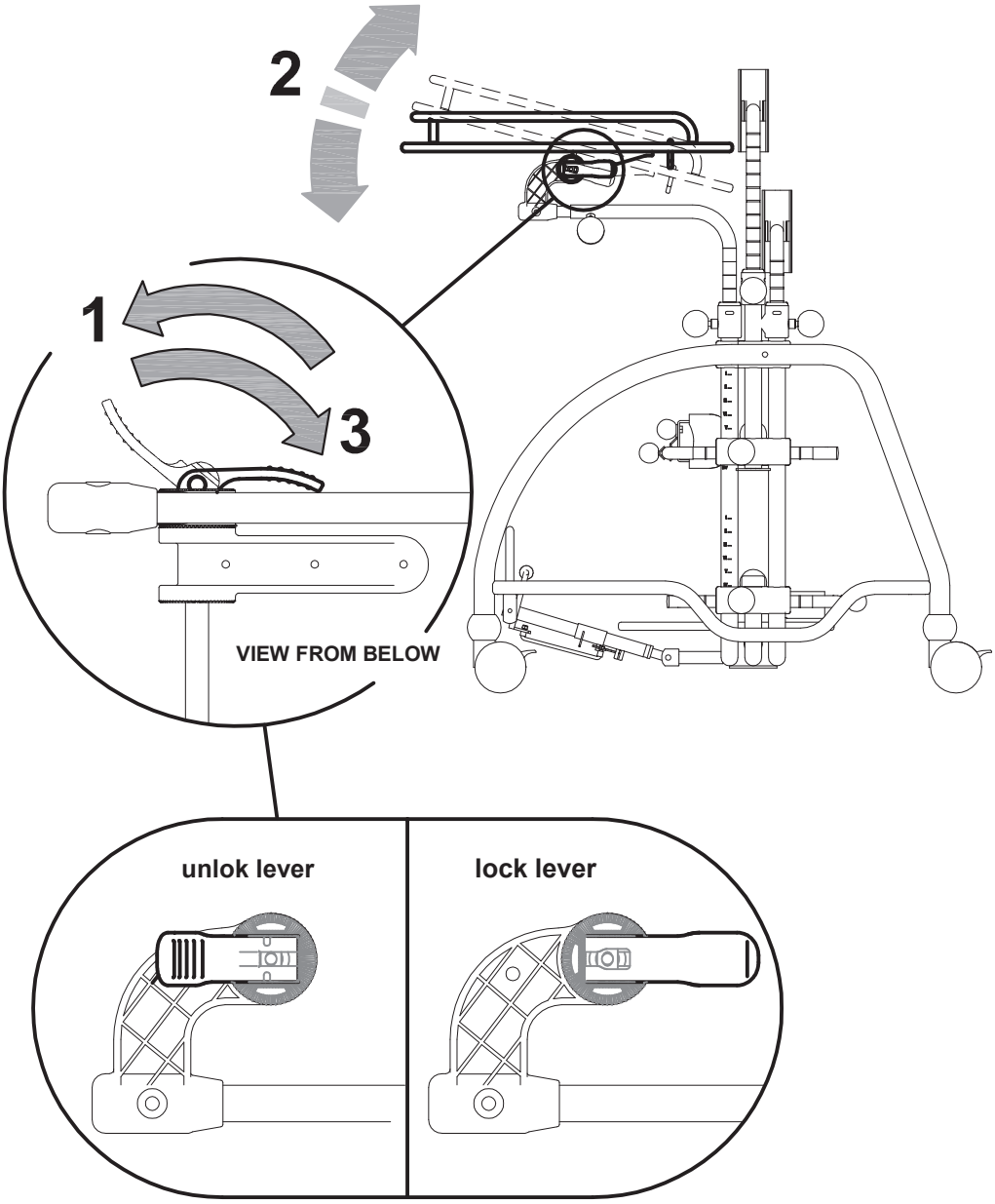

MOUNTING OF ADDITIONAL COMPONENTS

MULTIADJUSTABLE HEADREST 865

MOUNTING

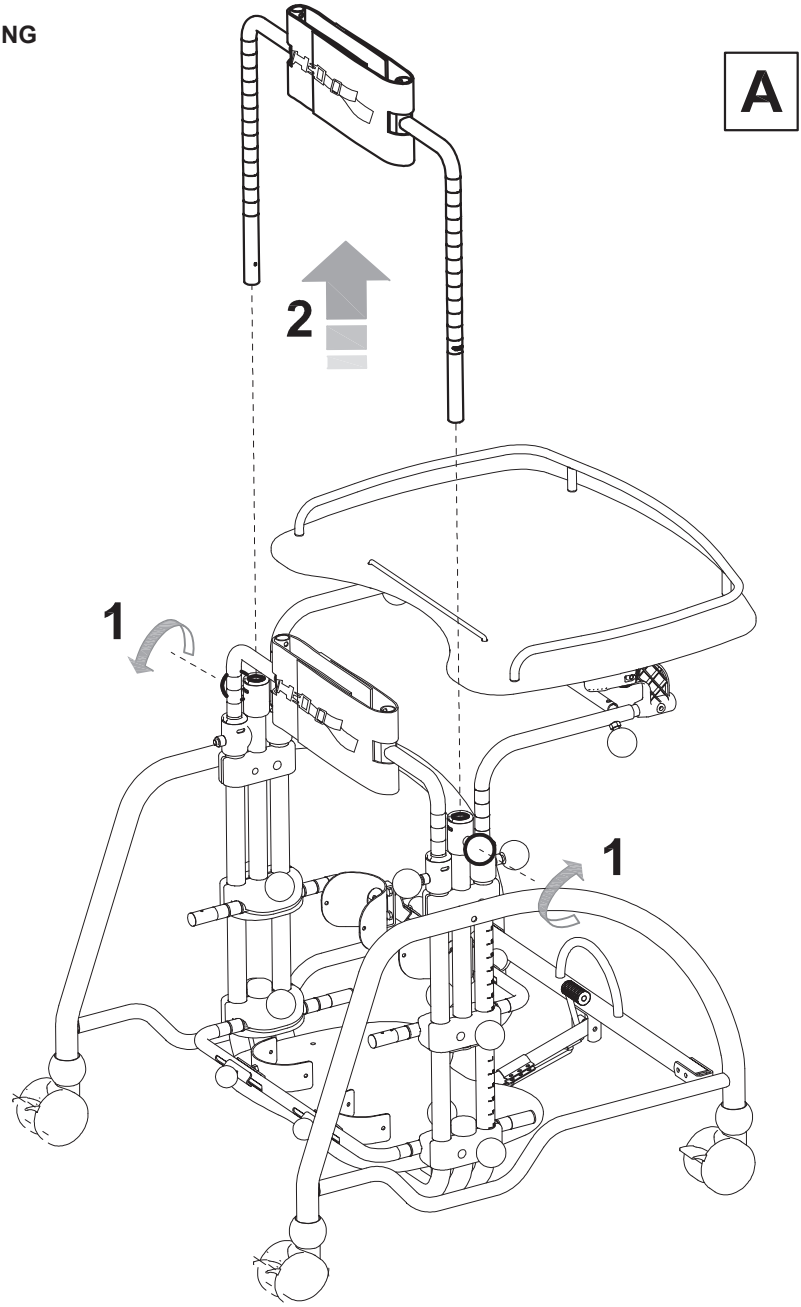

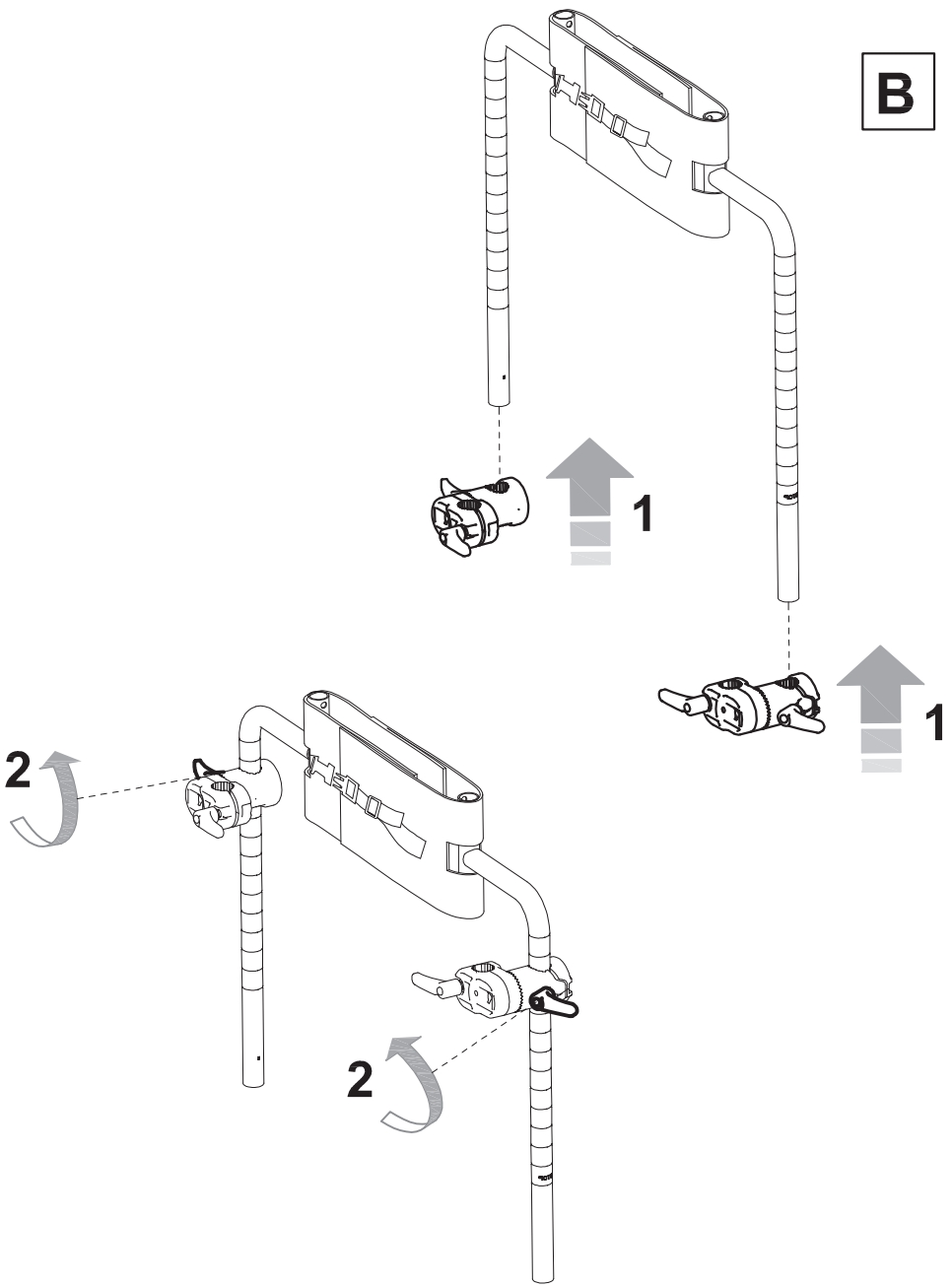
B
1
1
2
2

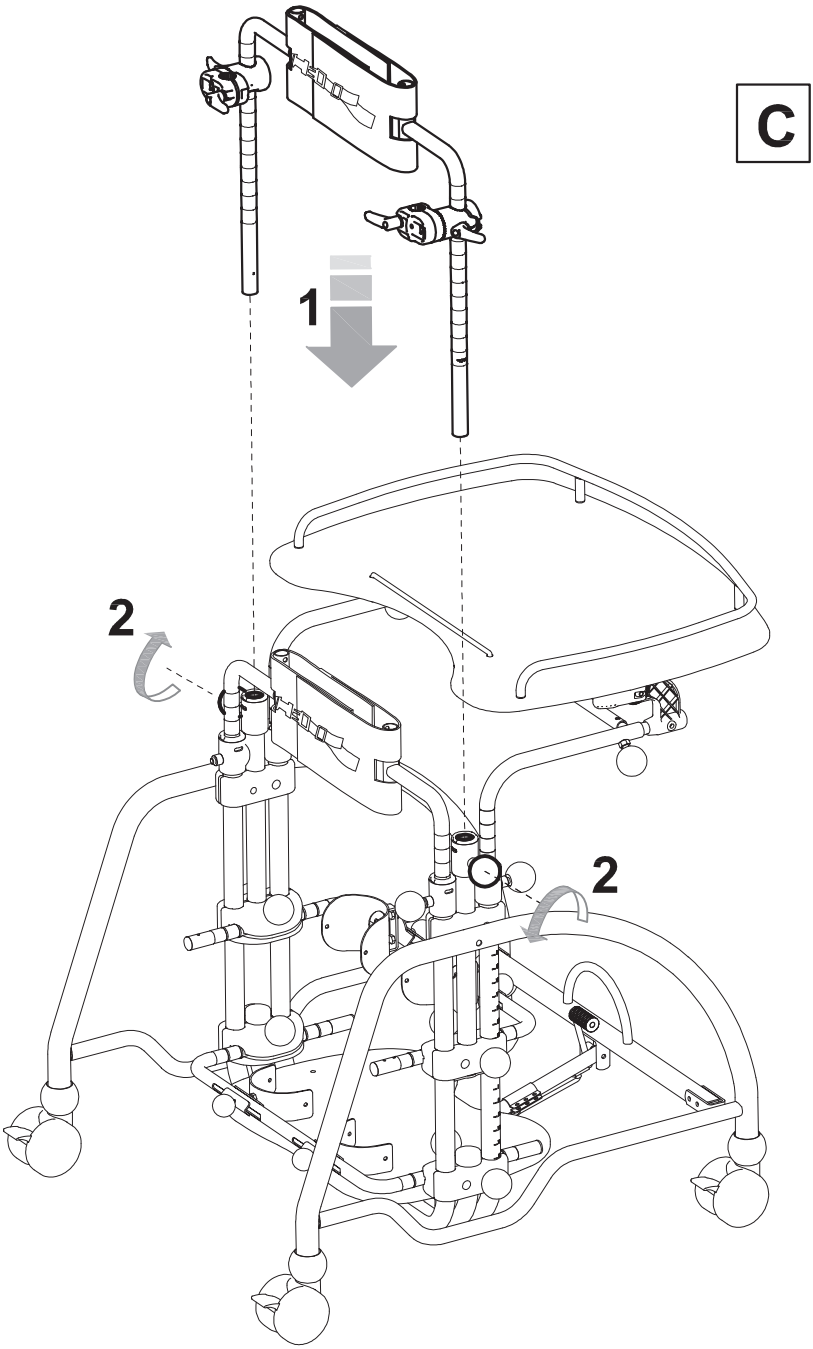
C
1
2
2

D

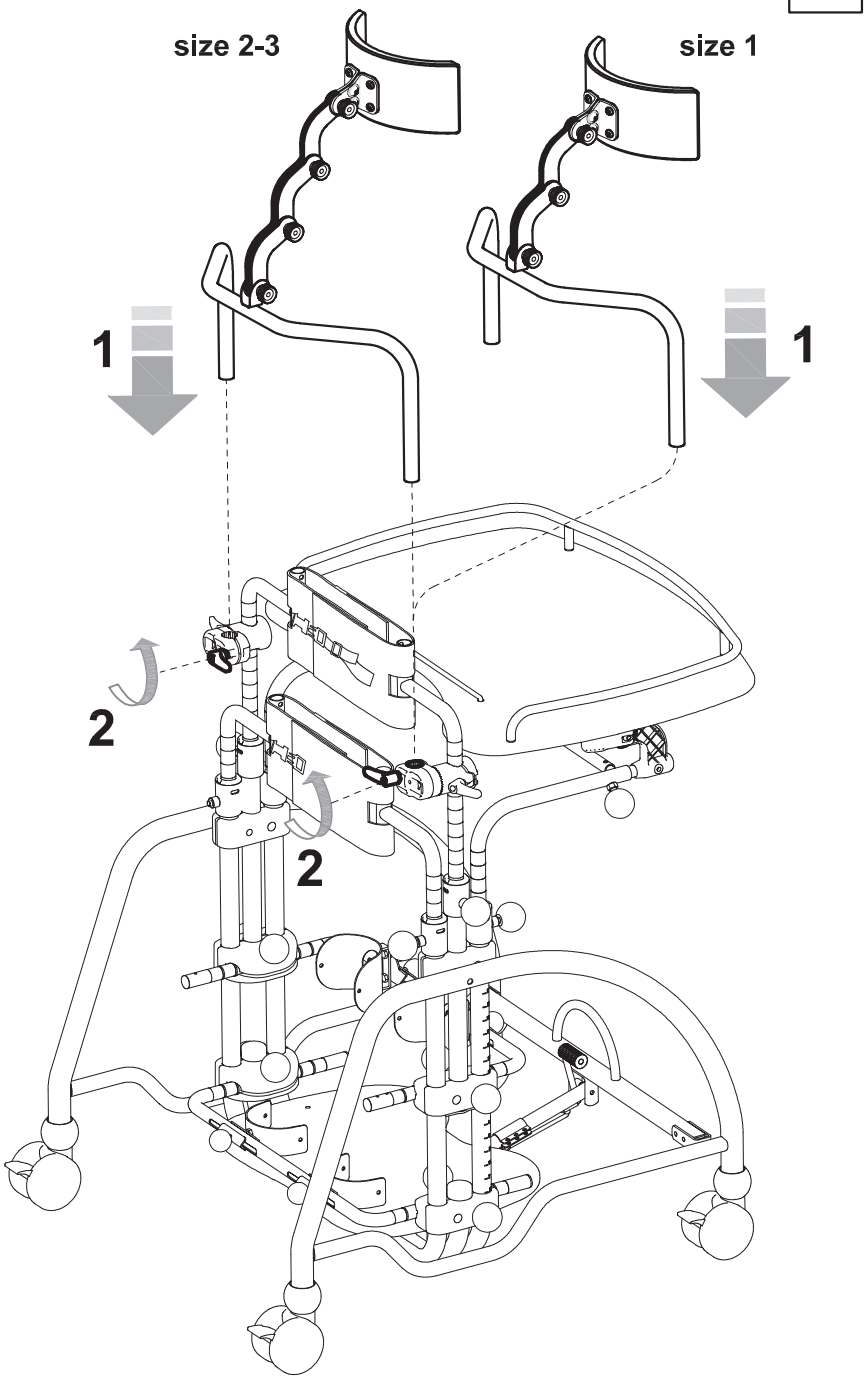

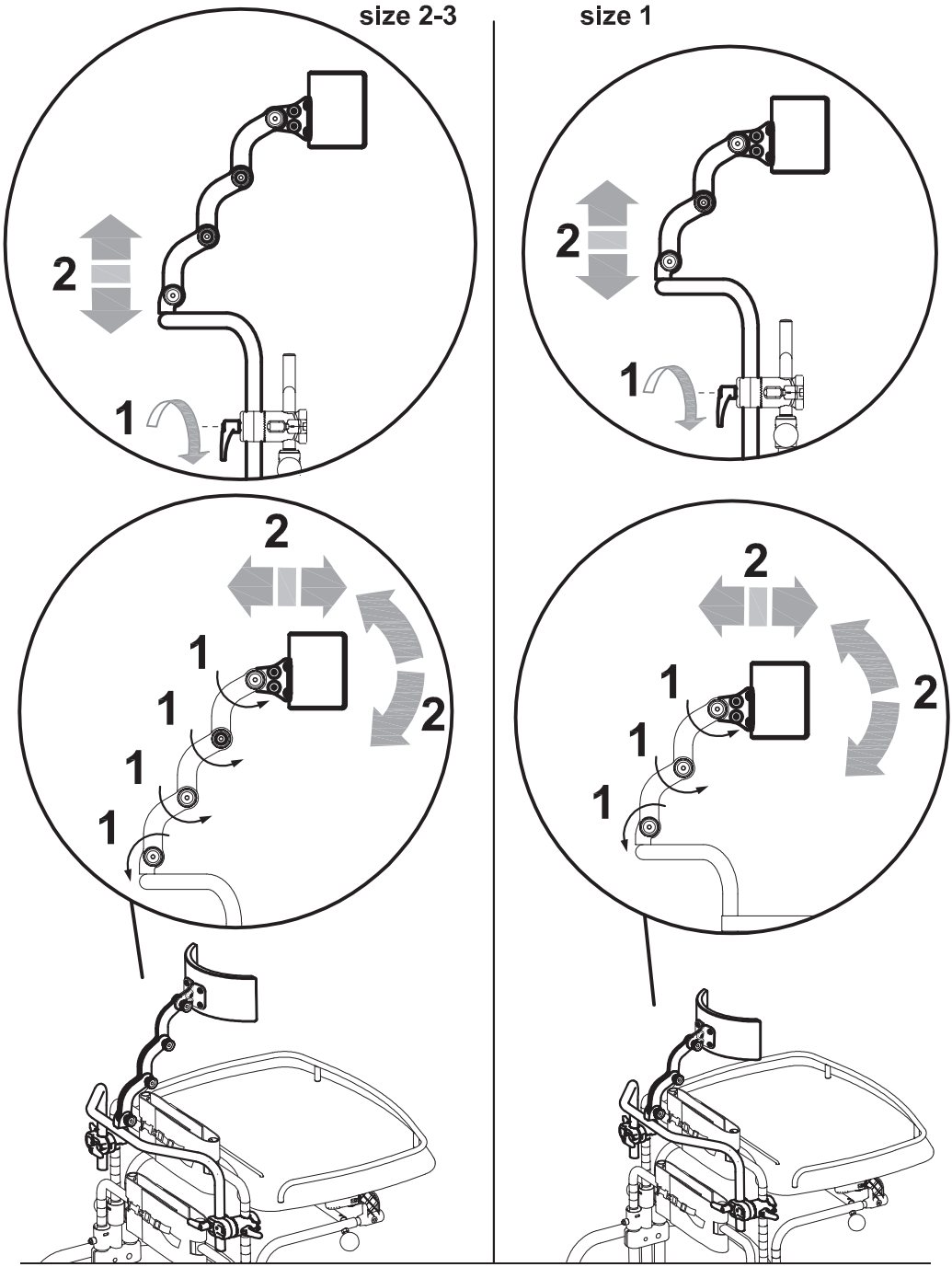
size 2-3
size 1
2
1
2
1
2
1
1
1
1
2
2
1
1
1
2

CIRCUMFERENCE REDUCTION PARTS 944

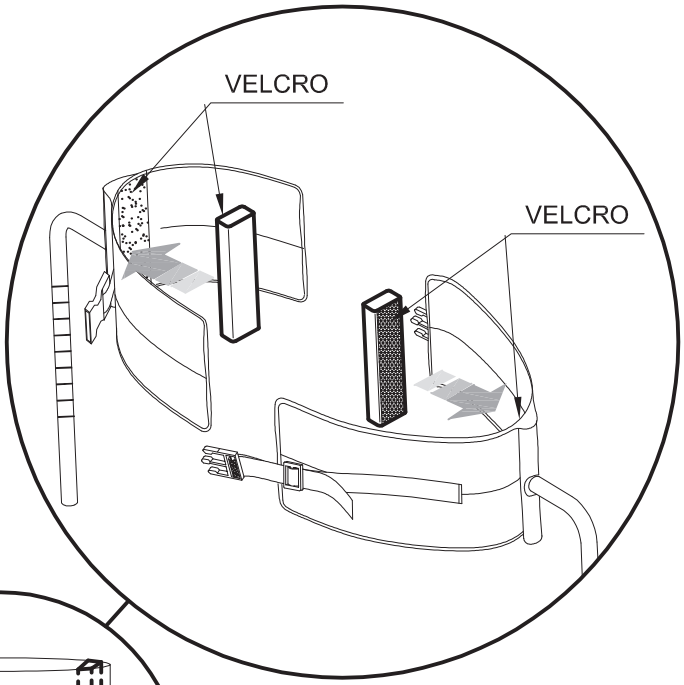

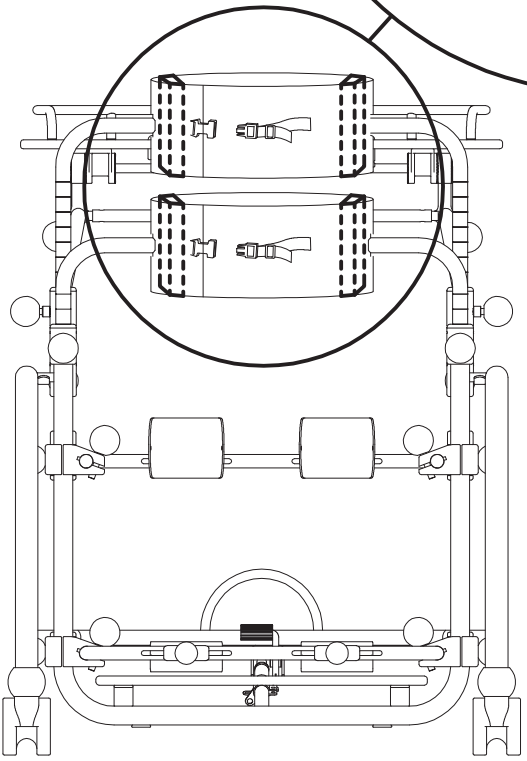

HOW TO REMOVE THE UPHOLSTERY FROM PELVIC AND CHEST SUPPORTS

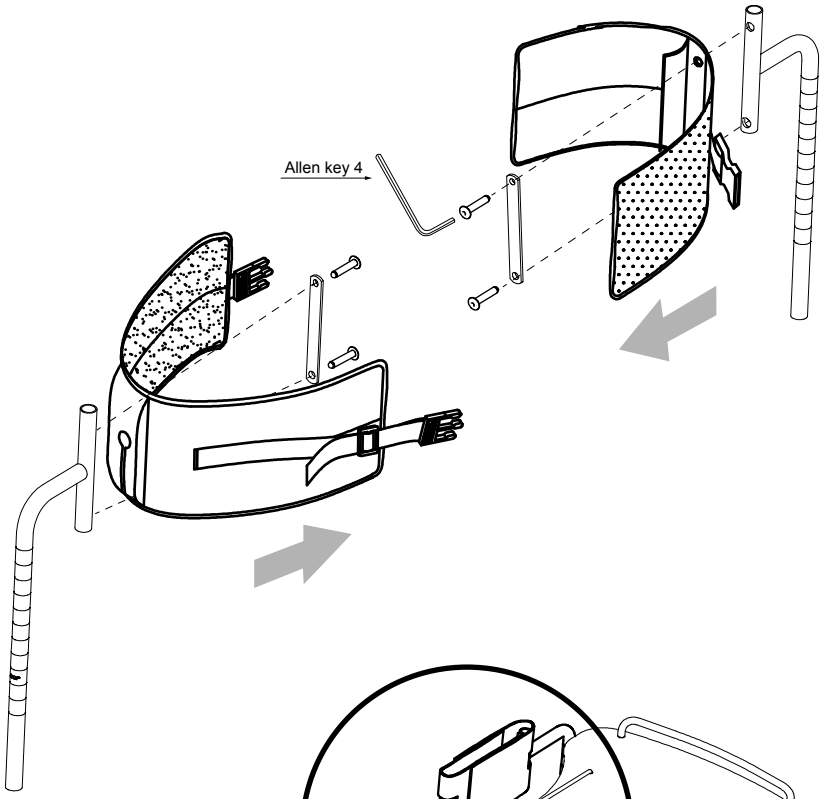

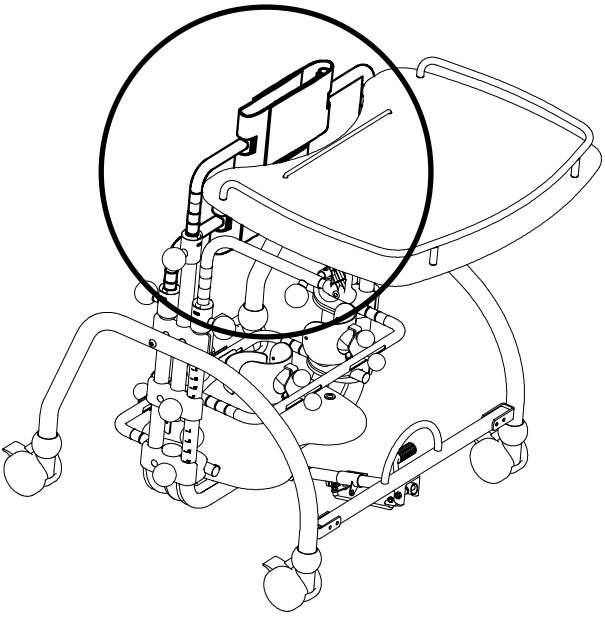

MAINTENANCE

The execution of all maintenance operations is necessary to maintain the correct functionality and safety of the device.

Only if these operations are carried out in the times and in the manner described, the responsibility for maintaining the essential requirements of the device rests with the manufacturer.

If in doubt about the safety or damage of the product, discontinue use and contact ORMESA.

1. ORDINARY MAINTENANCE (monthly)

1.1. Clean the WHEELS from dust and dirt to maintain the smoothness and efficiency of the-braking

1.2. The device does not require special lubrication. DO NOT LUBRICATE THE ADJUSTABLE ELEMENTS.

1.3. if necessary, lubricate the MOVING PARTS with commercial silicone dry oil with the precautions indicated on the container.



Intensify all checks in marine environments, clean more often, anoint the parts exposed to salt corrosion (such as chrome, bolts and screws).



If you verify an INEFFICIENCY, even if just partial, of the BRAKES, contact the Dealer who sold you the product immediately. He will evaluate their possible reparation/change in order to avoid dangerous situations that could cause accidents.



Maintenance and replacement of parts or components must never be done while the aid is being used.

2. PREVENTIVE MAINTENANCE (biennial)

The Manufacturer recommends a COMPLETE REVIEW of the device, in order to verify it according to the specific use and to maintain the initial performances for all its lifetime.

This activity can be carried out by the Dealer who supplied the product or by an SERVICE CENTER , specialized in the maintenance of mechanical aids for people with disabilities and includes:

1) **The general verification of the product, the integrity of the components and the locking of the mechanical parts, the smoothness of the moving parts**
2) **Performance verifications**
3) **The possible interventions aimed to restore the correct functionality**
4) **Mechanical control (in case of mechanical repairs)**
5) **Sanitization**

The person who performed the maintenance is required to issue A REPORT WITH THE EVIDENCE OF THE INTERVENTIONS (VERIFICATIONS, REPAIRS, CONTROLS, SANITIZATIONS)

3. EXTRAORDINARY MAINTENANCE (or corrective)

EXTRAORDINARY MAINTENANCE are all operations done on the device other than regular or preventive maintenance (mentioned above).

Extraordinary maintenance must be carried out by the Dealer who supplied the product or by another subject indicated by the Manufacturer or the Distributor of the ORMESA products in the country of destination.

The interventions must be performed with ORIGINAL REPLACEMENTS PARTS of the manufacturer

Modifications of the product ARE NOT ALLOWED, except for those of possible configurations provided on the brochure

For each maintenance work, the following must be performed:

1) **The general verification of the product, the integrity of the components and the locking of the mechanical parts, the smoothness of the moving parts**
2) **Performance verifications**
3) **Mechanical control (in case of mechanical repairs)**
4) **Sanitization**

THE MANUFACTURER or the AUTHORIZED PARTY must issue A REPORT WITH EVIDENCE OF THE INTERVENTIONS (CHECKS, REPAIRS, TESTS, SANITATION) CARRIED OUT

CLEANING, DISINFECTION, SANITIZATION

INFORMATION

SANIFICATION is the complex of cleaning and / or disinfection procedures and operations

The **CLEANING** is a physical and mechanical process (i.e., rubbing) with which a large part of potential pathogenic microorganisms (bacteria, fungus, or virus), further to the visible dirt, is removed from the surface.

The combination of mechanical action with other factors such as the use of detergents (chemical action), temperature and duration can efficiently and sufficiently reduce the microbial load of the device.

DISINFECTION, after cleaning and cleansing, further reduces the number of microorganisms on a surface and it eliminates pathogenic microorganisms, ie bacteria causing disease and viruses.
Products that on the label bear the authorization / registration Number of the Ministry of Health or other competent authority of an EU member State. are "disinfectants". Each disinfection action must always be preceded by a cleaning and cleansing operation, since dirt reduces the activity of the disinfectant. DRYING is essential because microbial growth can occur in the residual aqueous film.

CHEMICAL PRODUCTS WITH VIRUCIDAL-GERMICIDAL-FUNGICIDAL EFFICACY are available on the market for hospital equipment. These products are effective in cold conditions, able to perform cleaning (elimination of dirt) and disinfection (elimination of pathogenic microorganisms, i.e. bacteria causing disease) in a single operation. and viruses).

Removable **UPHOLSTERIES** are washable respecting the symbols on the label.
Washing is an extraordinary sanitation measure. Replace them when worn / difficult to sanitize.

WARNINGS

Read the TECHNICAL SHEET of the chemical product to verify that **it is suited** to be used on chrome plated/varnished surfaces and on plastic components in PVC, PA, PP and to test on a small surface to ensure that it does not damage the aid.

For an effective operation, it is important to RESPECT THE POSOLOGY and TIMES OFACTION indicated on the product LABEL.

Use the PPE (gloves, FFP mask, visor, etc…) required on the product **LABELP**



The operations of sanitization must be performed without the user inside the device. Do not use compressed air, which can cause aerosol and contamination of possible virus and bacteria in the environment and on his own person.



During the Covid-19 epidemic, the contaminated PPE (gloves, gowns, glasses, masks, caps, etc…) must be **thrown away in the general waste bin**, unless otherwise indications by the belonging municipality

PROCEDURE

Activities	Cadence	Description
4.1 CLEANING and CLEANSING	**daily or weekly** based on intensity of use and biological risk (patient with particular sweating, salivation; pandemic or endemic emergency period eg Covid-19) **Before disinfection**	Soak a sponge or a clean disposable cloth with neutral detergent previously diluted in water. Rub upholstery, frame, components and finally wheels. Remove any traces of product by wiping with a clean damp sponge or cloth. Dry with a clean soft cloth. Proceed with any disinfection
4.2 DISINFECTION	Before Re-using the product with a new user	Spray a virucidal / germicidal / fungicidal chemical product for hospital equipment that is effective cold on a clean disposable cloth. Rub the upholstery, the frame and the clean acomponents (4.2), until complete evaporation.
4.3 WASHING	**Based on use**	It is possible to wash the **REMOVABLE UPHOLSTERIES**, respecting the following indications :  Machine wash with neutral soap .Max. temperature. 40°. Delicate cycle  Do not bleach  Do not iron  Do not tumble dry  Dry horizontally. PADDED UPHOLSTERIES require EFFECTIVE DRYING IN A VENTILATED or HEATED ENVIRONMENT for at least 6-10 hours For an ANTIVIRAL DISINFECTANT action, a SPECIFIC CHEMICAL PRODUCT can be added to the normal washing cycle; washing at a high temperature (60 ° C) is possible as long as occasionally, as the upholstery may wear out.

4.4 SANITIZATION WITH PERCARBONATE	**Based on use**	**For a sanitizing action during the cleaning of the frame and the washing of the harness and removable upholsteries, you can add 1 teaspoon of percarbonate > 30% to the detergent:** - In the washing machine: add 1 teaspoon of percarbonate in the drum together with the detergent. - By hand/ for the frame cleaning: dissolve 1 teaspoon of percarbonate in the bowl together with the detergent, proceed with the washing, and cleansing. **WARNING!** **When washing / cleaning the fabric it is recommended not to mix sodium percarbonate with acids (for example: Vinegar, Lemon), as it could create chemical reactions that could damage it.**

DISPOSAL

If the product is to be disposed of, it must be done according to the law in the country of destination

CUSTOMER SERVICE AND SPARE PARTS

Only contact the retailer where you purchased the product for service and replacement parts.

CONDITIONS FOR DURABILITY, REUSE AND REASSIGNMENT TO A NEW USER

Granted that Ormesa products should be selected, evaluated and ordered for the needs of an individual user, reuse is however possible with the respect the following conditions.

Based on the experience of other similar sold models, on technological progress, on the guarantees of the Quality Management System certificated in 1998 according to ISO 13485, there is adequate confidence that **the average lifespan of the DONDOLINO is about 5 years, on condition that it is used according to the directions given in the user manual.**

Only when the conditions for storage and transport of chapter HOW TO STORE AND TRANSPORT THE MEDICAL DEVICE" are followed, the periods in which the product is stored at the dealer should not be considered in that time period

Factors unrelated to the product such as the development of the user, its diseases, the use and the surrounding environment can make significantly lower the duration of life of the product; on the contrary, if the indications on the use and maintenance are properly observed, the reliability of the product can extend well beyond the lifetime average above.

Prior to recycling or reassignment an already used Ormesa product, it is required that:

1. **a doctor or therapist verifies that the aid is appropriate and adequate to meet the dimensional, functional and postural needs of the new user, and if all its components are suitable / appropriate for him. You should also consider that the CE-marking and the manufacturer's responsibility for safety requirements for the product remain only if the original product still has not changed and only original accessories or spare parts have been applied**

2. **qualified technical personnel of a company specialized in the maintenance of technical aids for disabled people performs a detailed technical inspection to verify its condition and wear, the absence of any damage and failure of all components / adjustments, the presence of the user's manual, of the label with the date and serial number. A copy of the manual and maintenance may be always requested to the retailer that supplied the product or directly to Ormesa**

3. **The product has been thoroughly cleaned and disinfected following the directions given in the "MAINTENANCE, CLEANING AND DISINFECTION" Chapter**

We recommend you keep written records on all inspections performed on the product before any assignment to the new user.

In case of doubt about the safety of the product or damage to parts or components, you are urged to immediately discontinue use and contact the Dealer who supplied you with the product; the Distributor or the Manufacturer are at your disposal for any further doubt or assistance.

Ormesa srl Via delle Industrie, 6/8 - Z.I. Sant'Eraclio - 06034 FOLIGNO (PG) ITALY
P.I. IT 00574020541 CCIAA Perugia 119215 Iscr. Trib. Perugia 11907
Tel. + 39 0742 22927 Fax +39 0742 22637 info@ormesa.com
www.ormesa.com

SINCE 1980

Authorized Dealer

The technical Data and information given in this handbook are not binding. ORMESA reserves the right to carry out any necessary change without prior notice or replacements